Read this manual before operation

- The content include of electric connections and operating steps
- Read the manual to operate the systems

RDC6445G/S

Control System manual

RuiDa Technology Co., Ltd

Addr: 3th floor,Technology Building,NO.,1067 Nanhai Avenue,Nanshan District,Shenzhen city,Guangdong Province,P.R.China
Tel: 0755--26066687
Fax: 0755--26982287
E-mail: sales@rd-acs.com
Web: www.rd-acs.com

COPYRIGHT

All rights reserved.You may not reproduce, transmit, store in a retrieval system or adapt thispublication, in any form or by any means, without the prior written permissionof RuiDa, except as allowed under applicable copyright laws. We have identifiedwords that we consider as trademarks. Neither the presence or absence oftrademark identifications affects the legal status of any trademarks.

CERTIFICATION DECLARATION

CE

The product has been certified by the CE (Commutate European) safety certification. It has passed the corresponding conformity assessment procedure and the manufacturer's declaration of conformity, in accordance with the relevant EU directive.

ROHS

This product has been certified by EU legislation (Restriction of Hazardous Substances) Safety certification; comply with relevant EU environmental regulations.

FCC

This product has been certified by the Federal Communications Commission for safety, Comply with us electronic safety regulations.

SAFETY INFORMATION

When using this system, please make sure the operation is correct and the usage is safe. Some signs or text will be used to remind you to pay attention to the dangerous matters and some important information.

Dangerous:

Indicates a serious danger. In the process of use, if the operation is improper or the way of use is wrong, it may cause serious injury or even death to the user. Please do not operate it easily until you have made sure that the operation method is correct and the way of use is correct.

Warning:

Danger.n the process of use, if the operation is improper or the use is wrong, which may lead to the injury of the personnel, please do not operate the personnel and related personnel easily, until ensure the correct operation method and use method is correct before use.

Cautious:

Represents the potential risk of the product. In the process of use, if the use method is wrong or improper operation, it may cause damage to the product or some parts. Please do not use it until you have made sure that the operation method is correct and the usage is correct.

Important:

Represents important information to be paid attention to during the use of the product.Please do not ignore this information, this information will provide effective operational help.

This sign indicates laser radiation, which is usually posted on products with laser output. Please be careful with laser and pay attention to safety when using this kind of equipment.

Sign in、Devanning、Examine cargo

The product itself with plastic or metal shell, can protect the external electrical components from damage. The products are packed in foam bags and anti-static bags. If there is any external damage to the package, check the equipment and notify the carrier and carrier in writing of the damage.

Inportant:

After receiving the product, please check whether the outer package is intact, check whether the product is complete after unpacking and whether all parts are intact. If any damage is found, please contact ruida immediately.

Remove all cargo from package and keep packing material and wiring parts. Please take care of the safety of the goods when unpacking them.After taking out the goods, please check whether the parts are complete and intact. If any missing parts or damaged parts are found, please contact ruida technology immediately.Do not install or debug the equipment if any obvious damage is found.

Contents

Chapter 1 Overview 1
1.1 Briefing 2
1.2 Description of Controller Model 2
1.3 Comparison of Controller Performance 2
Chapter 2 Installation Size 5
2.1 Installation Size of MainBoard 6
2.2 Size of Panel 6
Chapter 3 Object Pictures and Interfaces 6
3.1 Object Pictures of MainBoard 8
3.2 Object Pictures of Panel 9
3.3 Electric connection 10
3.4 Lamp instruction 10
Chapter 4 Description of Interface Signal for MainBoard 8
4.1 Interface of Main Power Source CN0 14
4.2 Panel Signal-Cable Interface HMI 14
4.3 Udisk Interface 14
4.4 PC-USB Interface 14
4.5 Ethernet Interface 14
4.6 General Output Port CN1 14
4.7 General Input Port CN2 15
4.8 4-axle Spacing Input Interface CN3/CN4 16
4.9 X/Y/Z/U axle Motor Driver Interface AXIS_X~AXIS_U 16
4.10 Laser Power Control Interface CN5/CN6 17
Chapter 5 Examples of Laser Power Interface 19
5.1 Brief 20
5.2 Examples of Glass tube Laser Power 21
5.3 Examples of RF-Laser 22
Chapter 6 Examples of Driver Interface for Step-servo Motor 23
6.1 Brief 24
6.2 Examples of Motor Driver Connection 25
Chapter7 Examples of IO-port Wiring 26
7.1 Input 27
7.2 Output 28
Chapter 8 Operating Instruction of Panel 20
8.1 Brief 30
8.1.1 Overview 31
8.1.2 Introduction to the Keys 31
8.2 Speed Setting 33
8.3 Max/Min Power Setting 34
8.4 Set the layer parameters 34
8.5 Menu Function 35

8.5.1 User parameters 36
8.5.2 Vender parameters 39
8.5.3 Origin Setting 40
8.5.4 Backup parameters 41
8.5.5 Restore parameters 42
8.6 Controller setting 42
8.6.1 Language 42
8.6.2 Screen origin 43
8.6.3 Wireless panel 44
8.6.4 IP Setting 44
8.6.5 System Info 45
8.7 Funtions 45
8.7.1 Axis reset 46
8.7.2 Keyboard lock 46
8.7.3 Manual setting 47
8.7.4 Laser Setting 48
8.7.5 Diagnose 49
8.7.6 Laser power infomation 49
8.8 File Management 50
8.8.1 Memory File 50
8.8.2 Memory operation 51
8.8.3 Format memery 52
8.8.4 U disk file 53
8.9 Password input and settings 54
8.9.1 Password Input 54
8.9.2 Password Setting 54
8.10 Prompt and alarm information 55
8.11 Auto Focus 55
Chapter 9 Manufacturer/User Parameters Explanation 56
9.1 Manufacturer parameters 57
9.2 User parameters 60

Section 1 Overview

CONTENTS:

- Briefing
- Description of Controller Model
- Comparison of Controller Performance

1.1 Briefing

RDC6445G/S system is a new generation system for control of laser engraving and cutting, which is developed by RD Co., Ltd. In addition to high hardware stability, high voltage or static electricity rejection, and friendly 5" TFT man-machine display. This system is provided with stronger software function including perfect 4-axle motion control function, large-capacity file storage, two-channel adjustable digits laser power control interface, USB driver of stronger compatibility, multi-channel general/special IO control, and, this system can communicate with PC by USB2.0 or Ethernet, and the communication mode is automatically checked by the system.

The basic functions of RDC6445G and RDC6445S are the same from the perspective of users. Only RDC6445S has on-board clock logic and uses the term encryption logic in the form of authorization code.

1.2 Description of Controller Model

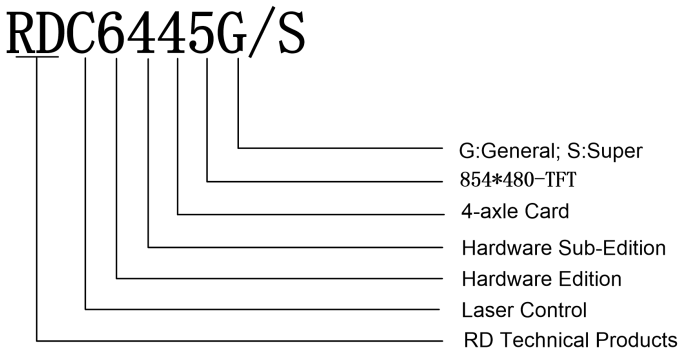

1.3 Comparison of Controller Performance

		RDLC 420	RDC6332G	RDC6342G	RDC644XG
Power Feature		One-way 5V, one-way 24V, independent	Only one-way 24V (compatible with 36V for power supply, but not recommended)	Only one-way 24V (compatible with 36V for power supply, but not recommended)	Only one-way 24V (compatible with 36V for power supply, but not recommended)
Laser Port Feature		One-way digit and one-way analog	Two-way digits and two-way analog port, settable independently and	Two-way digits and two-way analog port, settable independently and	Two-way digits port, settable independently and non-interacted

			non-interacted	non-interacted	
USB Feature	Copying Speed	Common	Quick	Quick	Very Quick
	Compatibility	Support USB disks with small capacity	Support all USB disks with different capacities	Support all USB disks with different capacities	Support all USB disks with different capacities
Memory Feature	Capacity	64M	256M	256M	128M
	Fault Tolerance	Common	Capable of checking defective track and formatting and good in fault tolerance	Capable of checking defective track and formatting and good in fault tolerance	Capable of checking defective track and formatting and good in fault tolerance
General IO Feature	Input Port	Two ways	4 ways (two for general, two for specialties)	4 ways (two for general, two for specialties)	4 ways (two for general, two for specialties)
	Output Port	1-way (low current, so additional drive is needed)	4-ways (500mA high current for each, OC output, no reverse current protection)	4-ways (500mA high current for each, OC output, no reverse current protection)	4-ways (500mA high current for each, OC output, reverse current protection included)
Software Feature	Power-off restart for Engraving	YES	YES	YES	YES
	Multi-origin Logics	NO	YES	YES	YES
	Parameter Backup Logics	NO	YES	YES	YES
	Work time Preview	NO	YES (the work time accurate to 1ms)	YES (the work time accurate to 1ms)	YES (the work time accurate to 1ms)
	Online Update Mainboard Program	NO	YES	YES	YES
Display Feature	Online Modification Laser Power/Speed	YES	YES	YES	YES
	Offline Modification Layer parameters	NO	YES	YES	YES
	Online Update Startup Display	NO	YES	YES	NO
	File dynamic/static preview	NO	YES	YES	YES

	Run progress bar display	NO	NO	NO	YES
	Modification Factory/User's para on display	NO	YES	YES	NO
	Display type	128*64, dot display	320*240 TFT display	320*240 TFT display	320*480 TFT display
Motion-axle Feature	Soft Spacing	YES	YES	YES	YES
	Hard Spacing	NO	YES	YES	YES
	Z-axle Linkage	NO	YES	YES	YES
	Feeding Feature	Single direction	Single/double direction for option	Single/double direction for option	Single/double direction for option
	Power-on Resetting	Fixed	Configurable for each axes	Configurable for each axes	Configurable for each axes
	Key Speed	Fixed	Configurable	Configurable	Configurable
	Axles	4	3 (Z axes is configurable to flat or feedin axes）	3 (Z axes is configurable to flat or feedin axes）	4
Encryption Feature		Encryption based on the PC time	Realtime clock and battery integrated for hardware encryption	Realtime clock and battery integrated for hardware encryption	RDC6445G: No realtime clock, but encryption included RDC6445S: Realtime clock and battery integrated for authorization code encryption
Communicate Mode		USB2.0	10/100MHZ Ethernet or USB2.0	10/100MHZ Ethernet or USB2.0	10/100MHZ Ethernet or USB2.0, communication mode is automatically checked

Section 2 Installation Size

CONTENTS:

- Installation Size of MainBoard
- Size of Panel

2.1 Installation Size of MainBoard

The unit of all sizes is millimeter (mm) and the size accurate to 0.1mm (the four holes are symmetrical)

Figure

2.2 Size of Panel

The unit of all sizes is millimeter (mm) and the size accurate to 0.1mm.

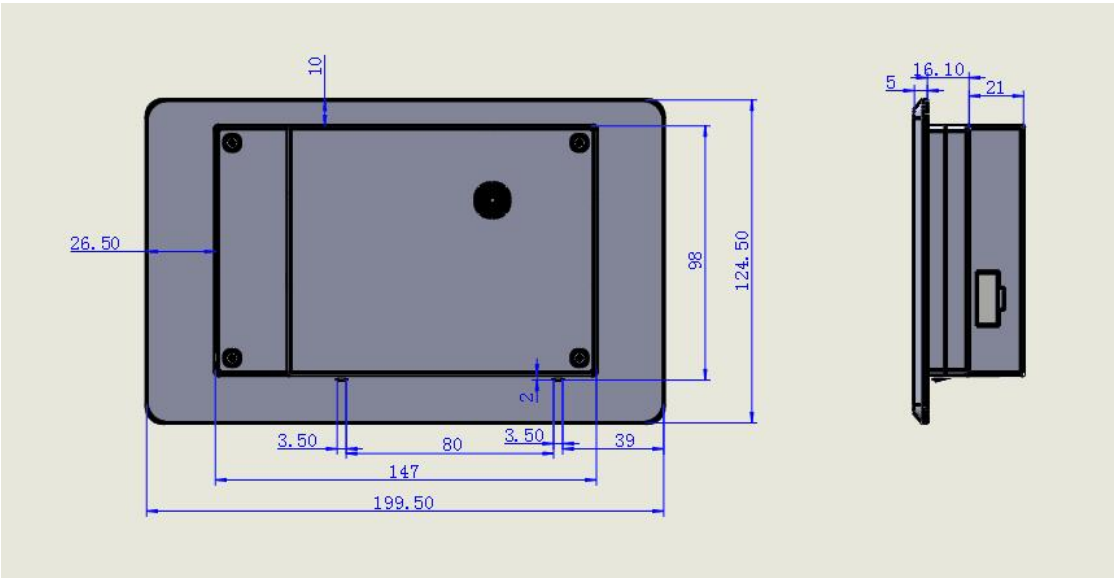

Figure

Section 3 Object Pictures and Interfaces

CONTENTS:

- Object Pictures of MainBoard
- Object Pictures of Panel
- Electric connection
- Lamp instruction

3.1 Object Pictures of MainBoard

For more detailed pin description, see the Chapter 4: Description of Interface Signal for MainBoard.

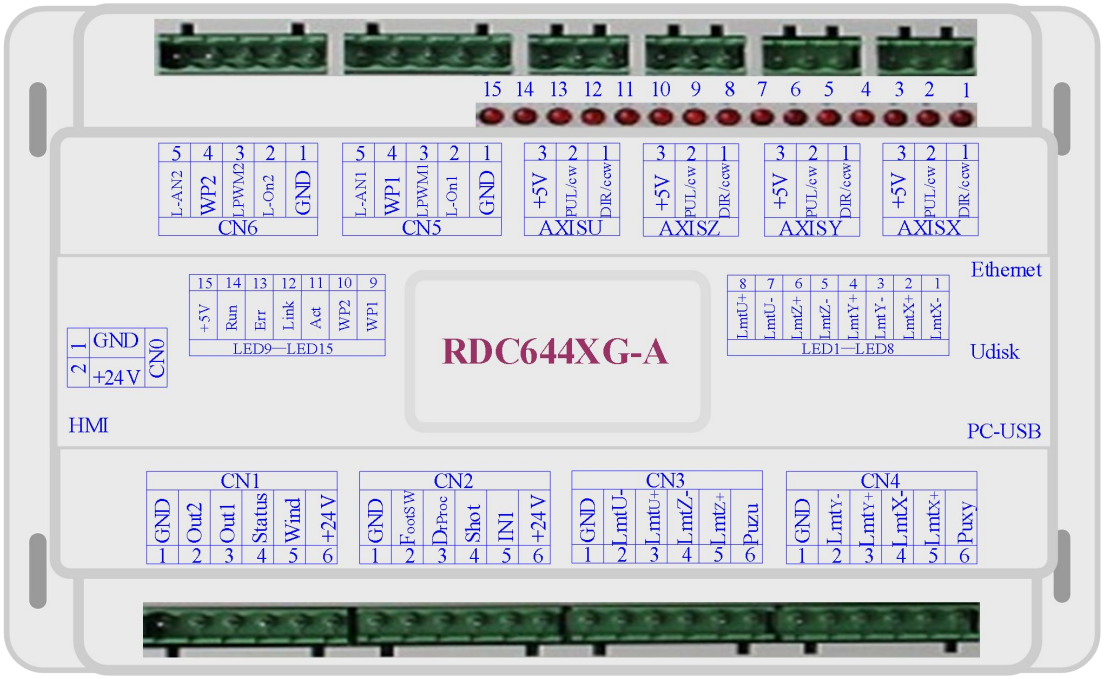

Figure: 3.1-1 Object Picture of

3.2 Object Pictures of Panel

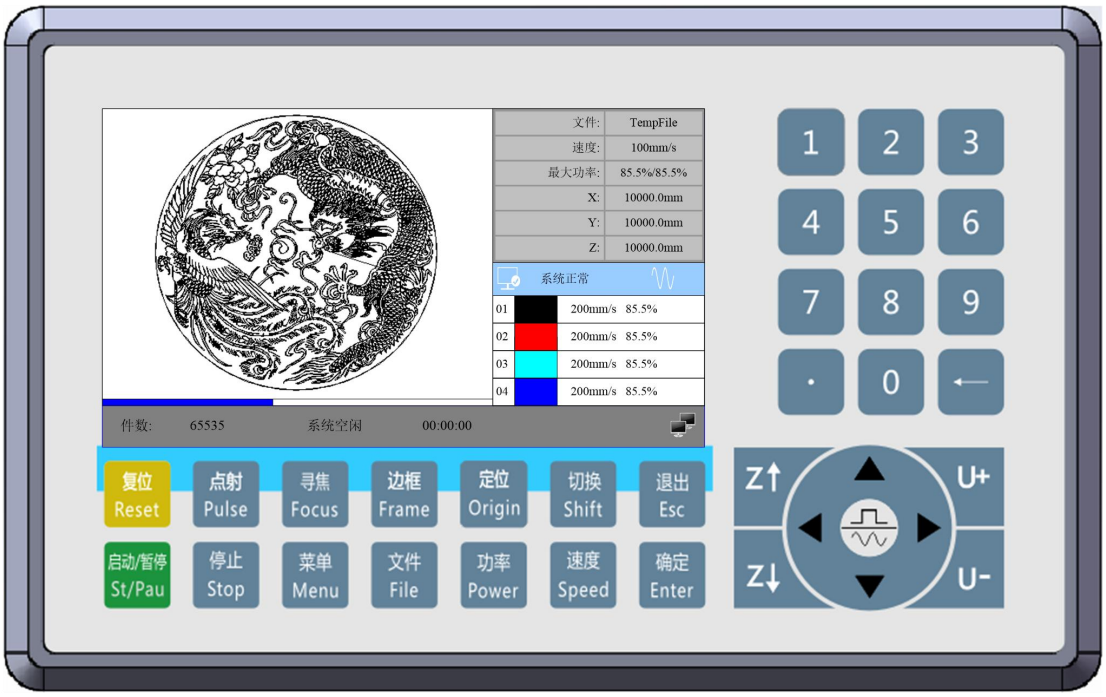

Figure: 3.2-1 Object Picture of Panel

3.3 Electric connection

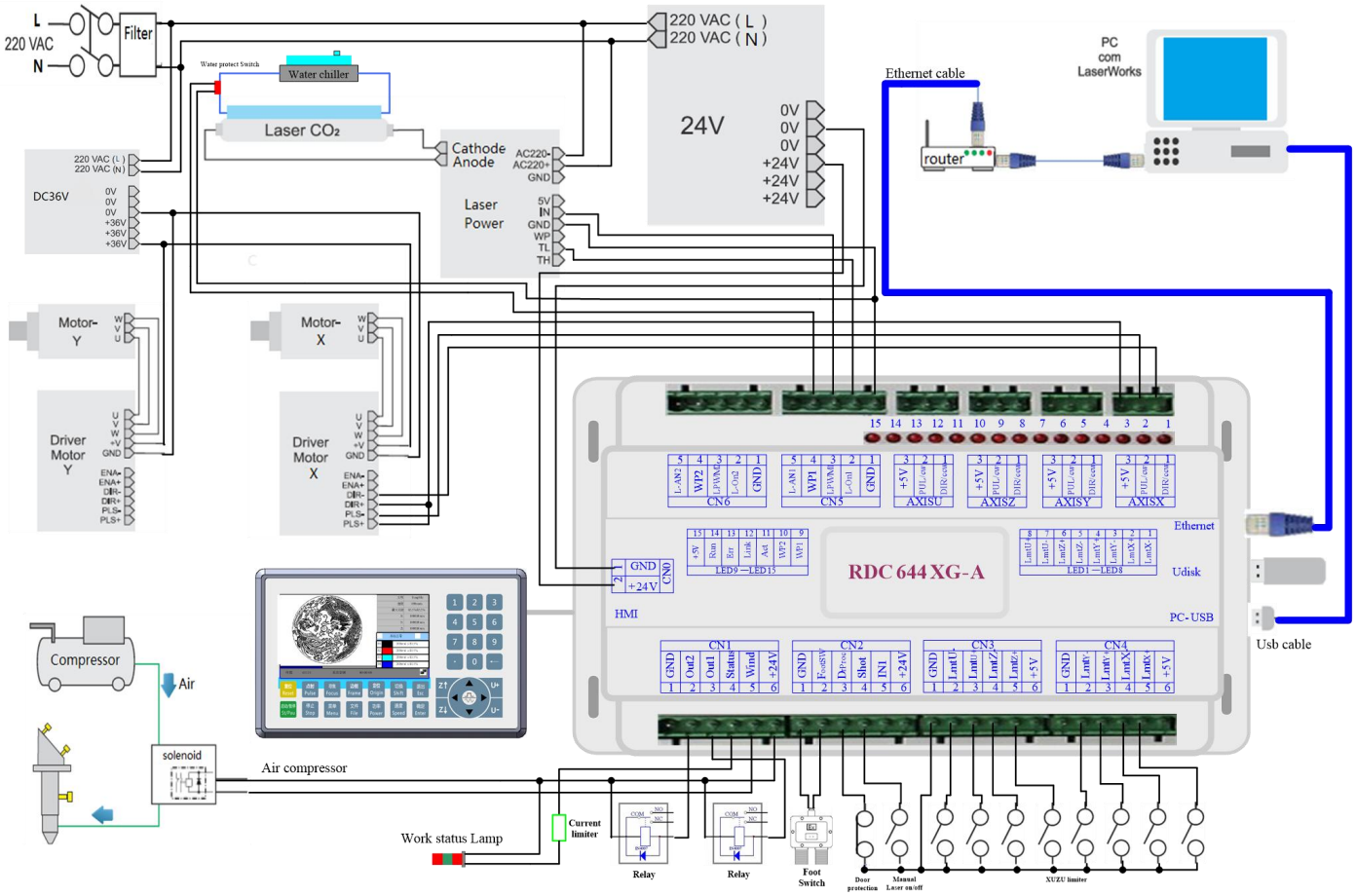

Figure 3.3-1 electric

3.4 Lamp instruction

RDC6445G/S have fifteen red lamps:

LED NUMBER	NAME	SENSE
LED1	LmtX-	X negative limit indicator
LED2	LmtX+	X positive limit
LED3	LmtY-	Y negative limit
LED4	LmtY+	Y positive limit
LED5	LmtZ-	Z negative limit
LED6	LmtZ+	Z positive limit
LED7	LmtU-	U negative limit

LED8	LmtU+	U positive limit
LED9	Wp1	Indication for water protect 1
LED10	Wp2	Indication for water protect 2
LED11	Act	Ethernet communication
LED12	Link	Ethernet connection
LED13	Err	error in controller hardware
LED14	Run	the normal running status
LED15	+5V	+5V power supply

Section 4 Description of Interface Signal for MainBoard

CONTENTS:

- Interface of Main Power Source CN0
- Panel Signal-Cable Interface HMI
- Udisk Interface
- PC-USB Interface
- Ethernet Interface
- General Output Port CN1

- General Input Port CN2
- 4-axle Spacing Input Interface CN3/CN4
- X/Y/Z/U axle Motor Driver Interface AXIS_X~AXIS_U
- Laser Power Control Interface CN5/CN6

4.1 Interface of Main Power Source CN0

Pin	Symbols	Definitions
1	GND	24V power ground (input)
2	+24V	24V power positive (input)

Caution	This control system employs single 24 power supply. For a certain margin, it is suggested to select 24V/2A power.

4.2 Panel Signal-Cable Interface HMI

The panel signal-cable is a pin-to-pin cable, which is included in the factory shipper bill.

4.3 Udisk Interface

Udisk is a USB-AM interface. The controller may visit the u-disk by this interface.

4.4 PC-USB Interface

PC-USB is a USB-BM interface. The controller may communicate with PC by this port.

4.5 Ethernet Interface

Using this interface, the mainboard can communicate with PC by 10/100MHZ Ethernet.

Caution	Pin to Pin Ethernet parallel line is recommended.

4.6 General Output Port CN1

Definition of general output port

Pin	Symbols	Definitions
1	GND	Power ground (output)
2	Out2	General output, system error indication output port. When a system error occurs, such as when the system enables the hard limit protection function and triggers the hard limit protection, this interface conducts. Can be used to connect error indicator lights in tricolor lights.
3	Out1	General output, system standby signal. When the system reset is completed and the system is in an idle state, this signal port conducts; otherwise, it closes. This signal port can be used for standby lights in external tricolor lights.
4	Status	General output, working status signal port, external relay, when the system is processing or pausing, the relay coil conducts; When the system is idle, the relay coil closes. This interface can also be used to connect the running indicator light of the three color light.
5	Wind	General output for blower control. When the blower control is enabled, this port will output the control signal of the blower, otherwise it will output other special control signals. When the blower is connected and its control enabled, the blower switch can be set separately on each layer. If the relay is connected externally, the relay coil will be broken over when the blower is on; the relay coil will be cut off when the blower is off.
6	+24V	24V Power positive output

Prompt	All outputs are isolated through the optocoupler, and 300mA current for each, OC gate output, each can directly drive the 5V/24V relay.

4.7 General Input Port CN2

Pin	Symbols	Definitions
1	GND	Power ground (output)
2	FootSW	Input port of foot switch. The connection method is: when the pedal is stepped down, the low-level signal will be inputted to this port; when the pedal is released, the port will be disconnected or the high-level signal can be inputted to this port; when the stepped-down pedal is held for not less than 100 ms, if the machine lies idle, it can be started for work; if the machine is in the working state, the work will be suspended; of the machine is in the suspension, the work will be restarted, that is to say, the function of the pedal switch is the same as that of the “Start/Pause” key on the HMI panel.
3	DrProc	Input from protective port. If the machine needs to be

		protected in the special state (such as door open protection), the protective signal can be inputted from this pin. This pin can be enabled and prohibited. This signal is not inquired by the mainboard if this pin is prohibited; if this pin is enabled, when the input is high-leveled or this input port is suspended, the machine will be protected, the work suspended and the laser closed.
4	Shot	Input for manual laser on/off. Low level is to open laser and high level or no-connection is to close laser.
5	IN1	General Input, with the function reserved.
6	+24V	24V Power positive output.

4.8 4-axle Spacing Input Interface CN3/CN4

X/Y axle spacing input CN4

Pin	Symbols	Definitions
1	GND	Power ground (output)
2	LmtY-	The spacing from axle Y- and Y to 0 coordinate
3	LmtY+	The spacing from axle Y+ and Y to max. coordinate
4	LmtX-	The spacing from axle X- and X to 0 coordinate
5	LmtX+	The spacing from axle X+ and X to max. coordinate
6	+5V	5V Power positive (output)

The spacing polarity is optional, that is to say, when the motion axle reaches the spacing position, it will trigger a low-level signal so as to make the corresponding LED (under the cover) light; when the motion axle leaves the spacing position, it will trigger a high-level signal or disconnect the spacing signal so as to make the spacing indicator go out, but when it leaves the spacing, the corresponding indicator will light and the spacing polarity become positive. The mistaken setting of spacing polarity will result that the spacing can't be detected when the system is reset so as to lead to the collision of axles.

The pin definitions of Z/U axle spacing input CN3 are the same as CN4.

All XYZU axle spacing inputs are compatible to 5V/12V/24V logic level inputs。

4.9 X/Y/Z/U axle Motor Driver Interface AXIS_X~AXIS_U

The interfaces of the above four motion axles are the same. The AXIS-X interface is exampled.

Pin	Symbols	Definitions
1	DIR	Directional signal
2	PUL	Pulse signal
3	+5V	5V Power positive (output)

The polarity of directional signal for driver pulse signal can be set. Where a certain axle is reset, it will move to the opposite direction of machine origin, which means the polarity of directional signal for this axle is not correct. In such a case, the connection between this axle and the motor driver can be broken first (otherwise the mainboard can not be detected to the spacing so as to lead to the collision of this axle), and then such a polarity can be corrected after this axle is reset completely. Upon the correction, the reset key can be pressed against to reset the mainboard.

And, the Pulse signal can be falling edge valid or rising edge valid. The default setting is falling edge valid.

Prompt	The Pulse signal and the directional signal are all OC outputs. The Controller must be common anode with the motor driver

4.10 Laser Power Control Interface CN5/CN6

This control system has two independent and adjustable digital laser power control interfaces. Signals of the two interfaces are similar and the first digital interface (CN5) is hereby exampled:

Pin	Symbols	Definitions
1	GND	Power ground (output)
2	L-ON1	Laser-enabled control interface 1. When the laser is the RF laser, this pin will not be used; 2. When the laser is a glass tube, if the used laser is outputted in the low-level form, this pin will be connected with the laser power enable end and used to control the ON/Off of laser.
3	LPWM1	Power control interface of laser/laser tube 1. When the laser is the RF laser, this pin will be connected with the laser RF-PWM end; 2. When the laser is a glass tube, this pin will be connected with the laser power PWM end and used to control the power of the laser.

4	WP1	The input port of water protector for the first laser power source. When the water protector 1 is enabled, the mainboard will detect the input port of water protector 1. If this port is of low level, it will be deemed normal; if this port is of high level, the mainboard will forcibly close the laser to suspend the work in progress and the system will warn. If the water protector 1 is not enabled, the mainboard will not detect the input port of water protector 1 and so the water protector 1 can be unconnected. ***Water protection input must be 24V logic level.***
5	L-AN1	The Laser/tube analog voltage power control interface, 0~5V analog voltage output.

Prompt	Please correctly select the laser type in the factory parameters.

Section 5 Examples of Laser Power Interface

CONTENTS:

- Brief
- Examples of Glass Tube Laser Power
- Examples of RF-Laser

5.1 Brief

This control system has two independent and adjustable digital laser power control interfaces, which can be used to control glass tube laser power and RF-laser.

Please correctly select the laser type in the factory parameters, or, the laser control is incorrect.

5.2 Examples of Glass tube Laser Power

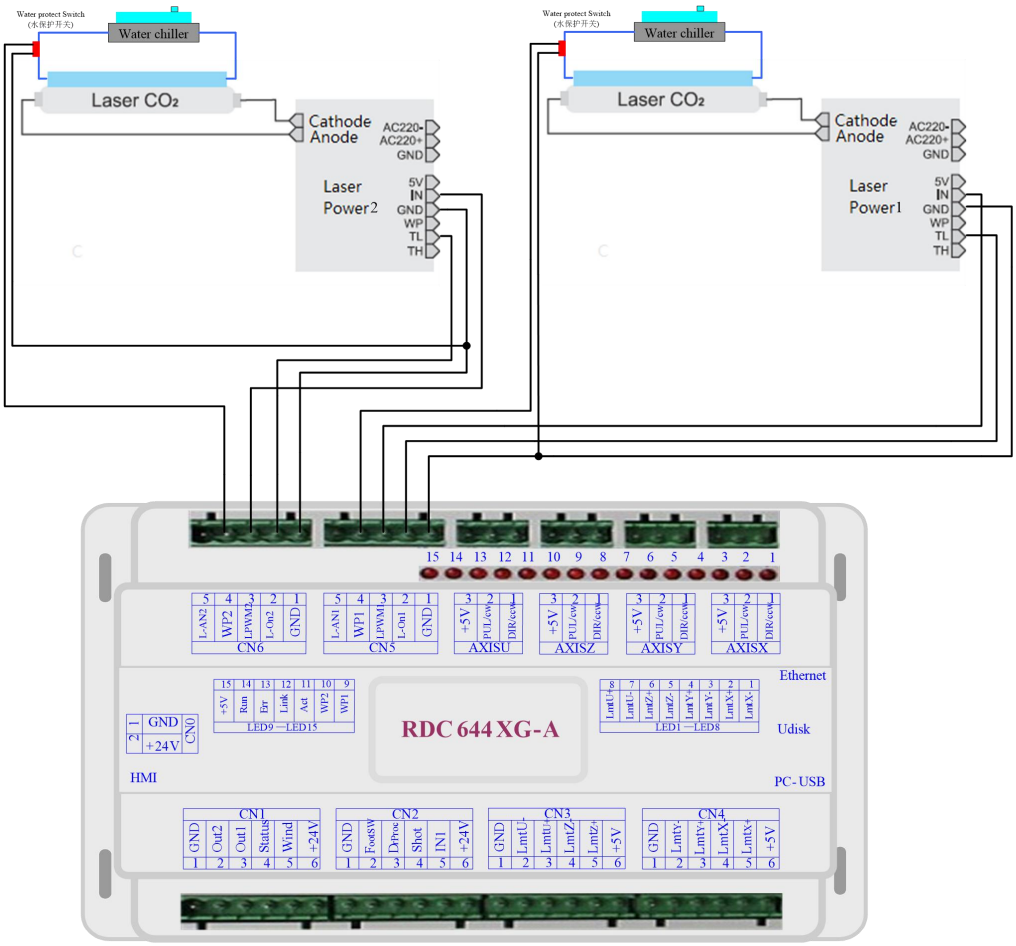

5.3 Examples of RF-Laser

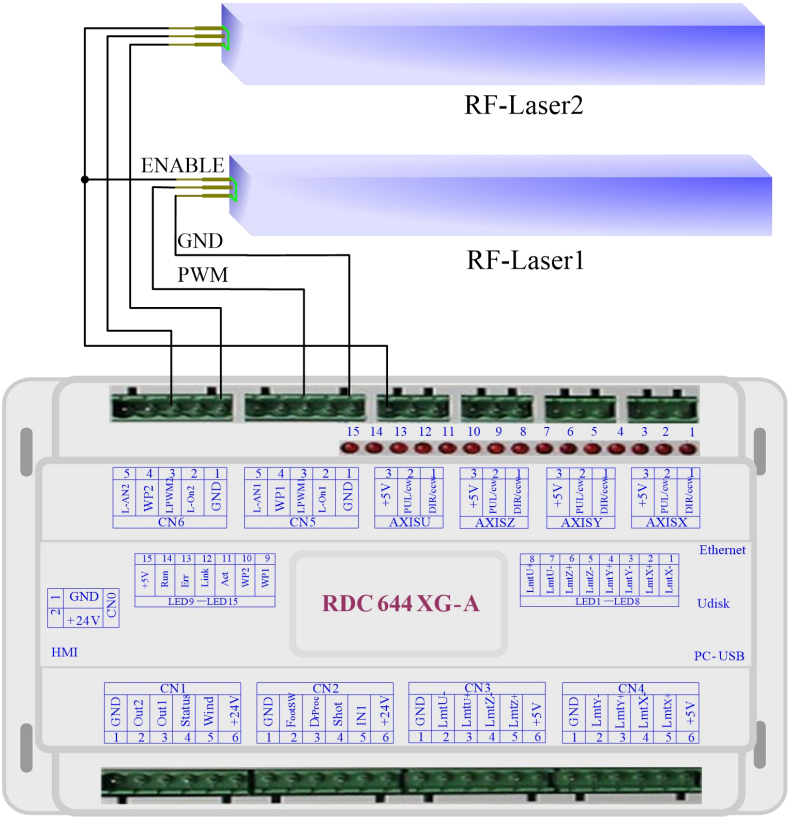

Section 6 Examples of Driver Interface for Step-servo Motor

CONTENTS:

- Brief
- Examples of Motor Driver Connection

6.1 Brief

The input signal end of step-servo motor driver employs the light-coupled isolation technology. For the step-by-step impulse signal, some isolate the side OC diode from cutoff to conduction (e.g. the valid falling edge of pulse signal inputted from the diode minus end) and some do so from conduction to cutoff (e.g. the valid rising edge of pulse signal inputted from the diode minus end).

When it is indicated whether the pulse signal of motor driver is the valid rising edge or the valid falling edge, it will be subject to the pulse signal inputted from the minus end of side OC diode.

Some input signals of motor driver are independent and some are internally of common anode, so some have 4 external leading-out wires and some 3 wires (only the pulse and directional signals are counted) as shown in Figure 6.1-1 and 6.1-2.

RDC644XG Controller has four groups of 3-wires motion driver interface, each interface has one direction signal, one pulse signal, and one 5V positive output, the direction signal and the pulse signal are all OC output.

RDC644XG controller must be common anode with the motor driver. The polarity of the direction signal can be changed in the factory parameters, and the valid edge of the pulse signal can also be changed.

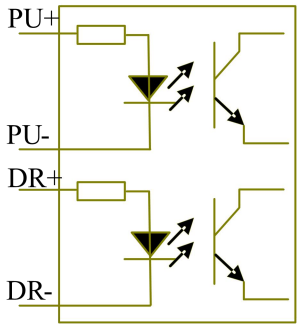

Figure: 6.1-1 Four Inputs, Independent Input Signal of Driver

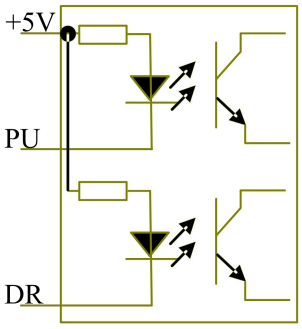

Figure: 6.1-2 Three Inputs, Common-anode Input Signal of Driver

6.2 Examples of Motor Driver Connection

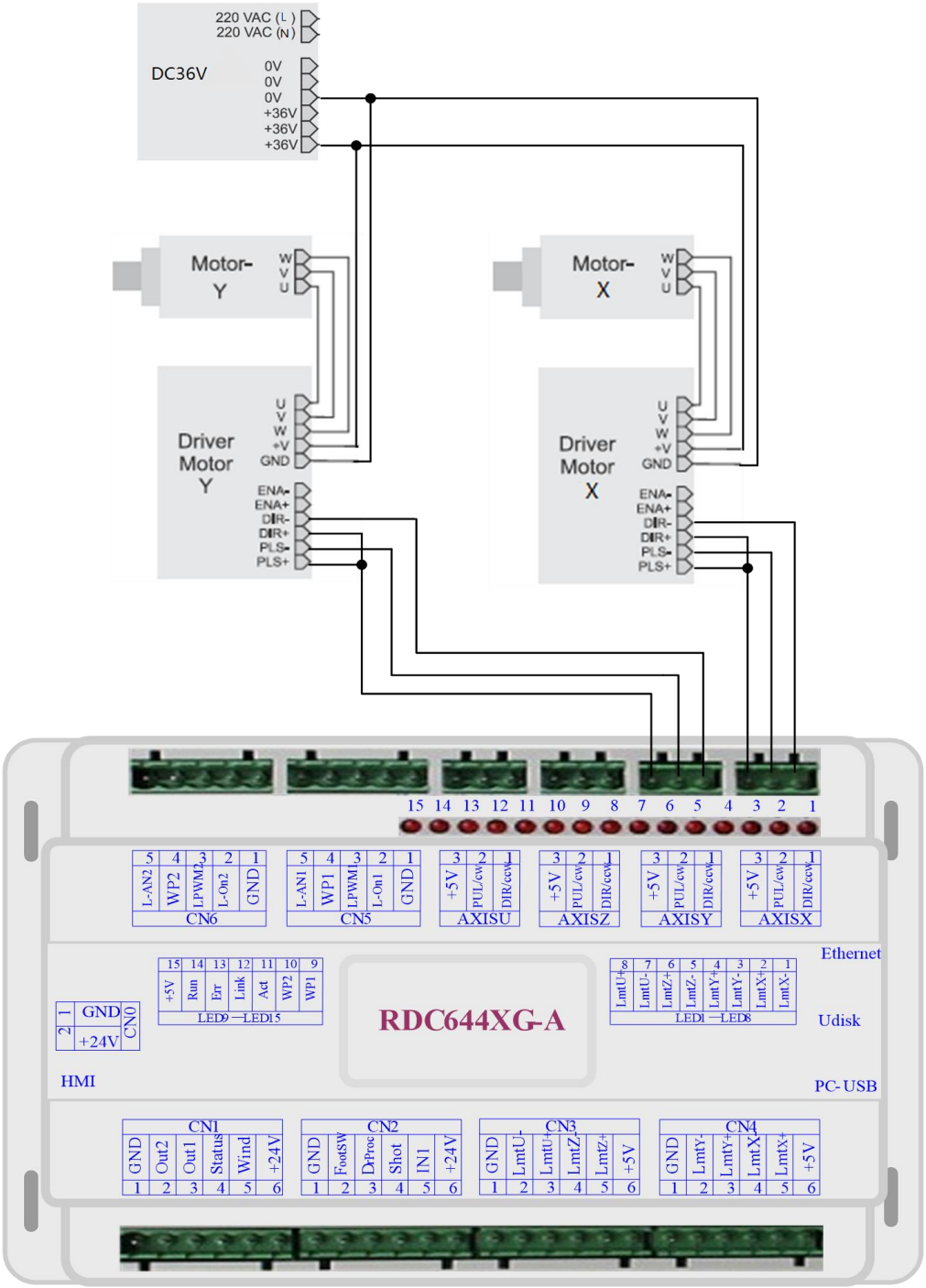

Section 7 Examples of IO-port Wiring

CONTENTS:

- Input
- Output

7.1 Input

The two water protection inputs are 24V logic level; all other inputs are compatible with 5V/12V/24V logic level.

Input connection shown as below

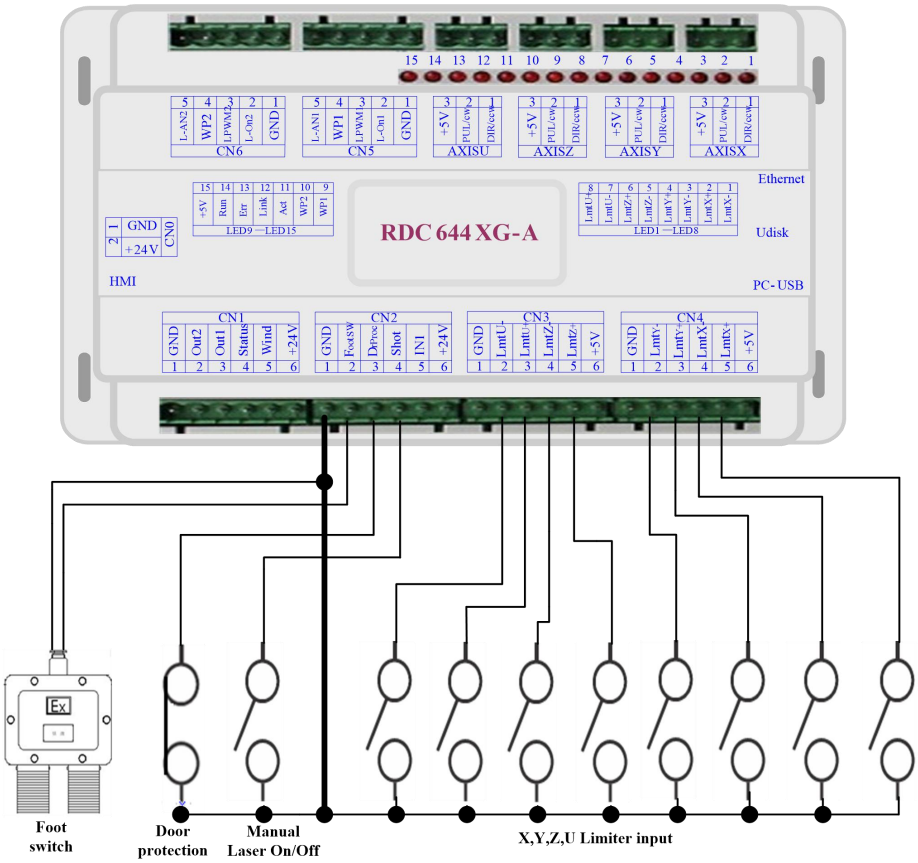

Figure 7.1-1 example of input

7.2 Output

All outputs are isolated through the optocoupler, and 500mA current for each, OC gate output, each can directly drive the 5V/24V relay, led lamp, buzzer etc.

Output connection shown as below

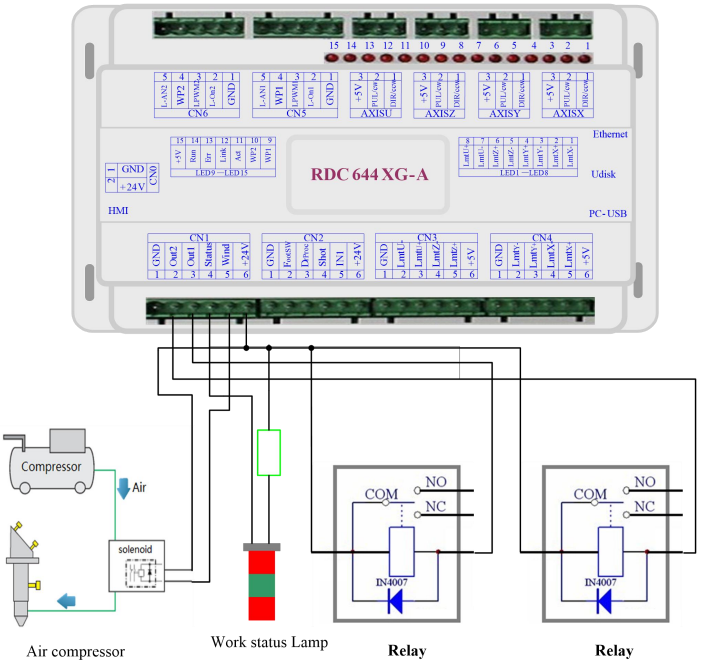

Figure 7.2-1 example of output

Section 8 Operating Instruction of Panel

CONTENTS:

- Brief
- The main interface
- Speed Setting
- Max/Min Power Setting
- Set the layer parameters
- Menu Function
- Controller setting
- Funtions
- File Management
- Password input and Settings
- Prompt and alarm Information
- Auto Focus

8.1 Brief

8.1.1 Overview

RDC6445G/S-HMI control panel (hereinafter referred to as "panel") is a 5.0 inch TFT LCD screen based human-machine interface, with beautiful interface, man-machine friendly, smooth control, cost-effective features. The panel can depict the motion track of the controller in real time, which makes the user understand the current processing graphics at a glance, supports file management, file preview, user and manufacturer parameter modification, and supports multi-language interface switching and other functions.

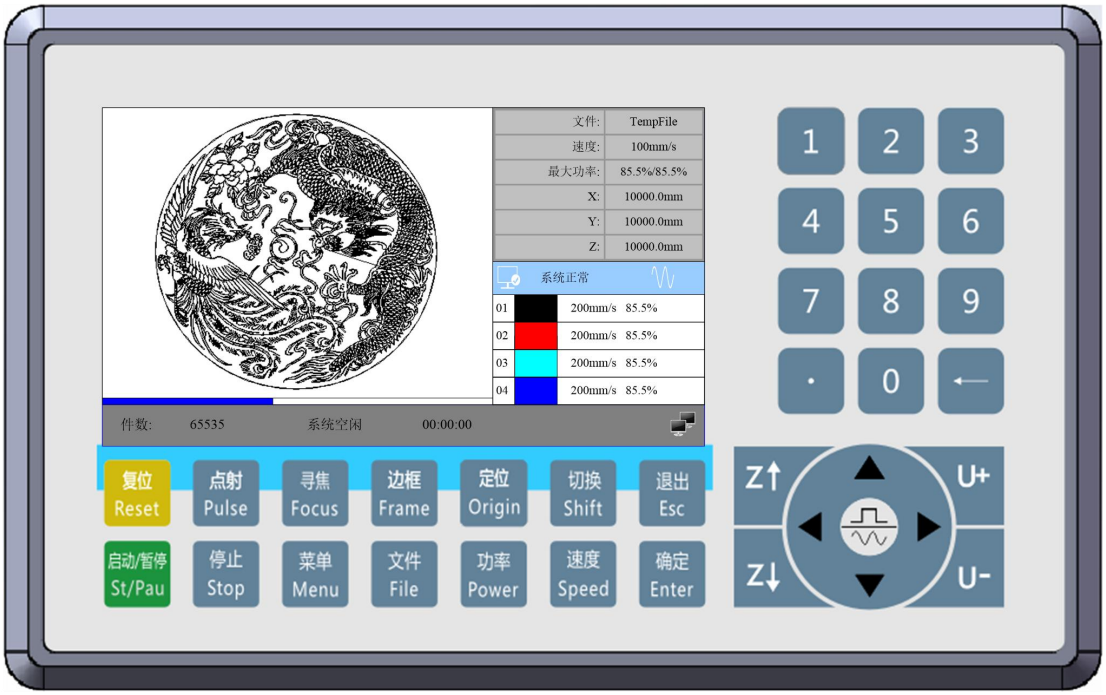

Figure 8.1.1-1 Object picture of

Panel Features：

- 5.0″TFT
- 854×480 resolution
- 64K color
- RS232 standard serial communication

8.1.2 Introduction to the Keys

- 复位 Reset — Reset the whole system.
- 启动/暂停 St/Pau — To start or pause the work.
- 点射 Pulse — Let the Laser to splash.
- 停止 Stop — Stop working or motor axis motion.
- 寻焦 Focus — Automatic searching for focus.
- 菜单 Menu — User parameters, factory parameters, language settings, etc.
- 边框 Frame — To track by the current file's frame.
- 文件 File — The management of the memory and U disc files.
- 定位 Origin — Set the relative origin.
- 功率 Power — Set the laser power of the current running layer, or set the power of "Laser" Key.
- 切换 Shift — Special function switching.
- 速度 Speed — Set the speed of the current running layer, or set the direction keys' move speed.
- 退出 Esc — To stop work, or to exit to some menu.

- 确定 Enter — Validate the change.
- To move the X axes and Y axes or Up, down, left and right functions
- Z↑ Z↓ — Moving Z axis.
- U+ U− — Moving U axis.
- Point movement and continuous motion switching.
- Decimal point.
- Backspace.
- Digital key 0~9：Used to set parameters.

8.2 The main interface

When the system is powered on, the screen will show as below:

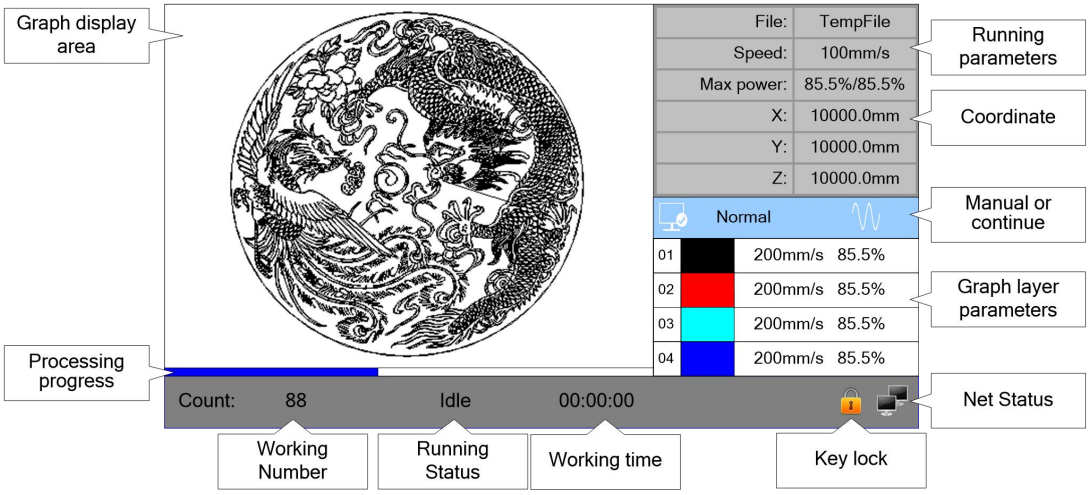

Figure

- Graph Display Area: To display the whole file's track, and display the running track.
- Running parameters: To display the running file's file number, speed, max power etc..
- Coordinate: To display the current coordinate of X,Y and Z axes.
- Graph layer parameters: To display the layers' information of the current file, such as max or min power, speed etc.. When system is idle, dblclick the layer, then users can change the layer's parameters and the changing would be saved.
- Running Status: To display the current status of the machine, such as Idle, Run, Pause, Finish, etc..
- Running Progress Bar: To display the progress bar of the current running file.
- Working Number: To accumulate the work number of the current file.
- File Dimension: To display the dimension of the current file.
- Net status: To display the connecting status of the Ethernet. When the network connection is successful, the icon is displayed,otherwise the icon is displayed.
- Key lock status：When the keyboard lock function is enabled, the icon is displayed,any key press does not respond and prompt for the unlock password, enter the correct unlock password before unlocking.

When work is Idle or finished, all keys can be pushed, users can select a file to run, set some parameters, preview to a select file etc. But, when work is running or paused, some keys don't respond when they are pushed.

8.2 Speed Setting

Push the< Speed>key when the screen is on the main interface, it will show as below:

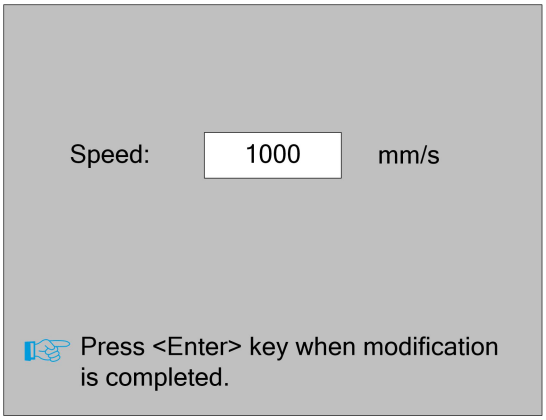

Figure

Press the number key and backspace key to set and modify the parameters. After modifying, press

the **<Enter>** key to save the parameters. Press the **<Esc>** key to cancel the modification parameters. The interface disappears and returns to the main interface.

8.3 Max/Min Power Setting

Push the **< Power>** key when the screen is on the main interface, it will show as below:

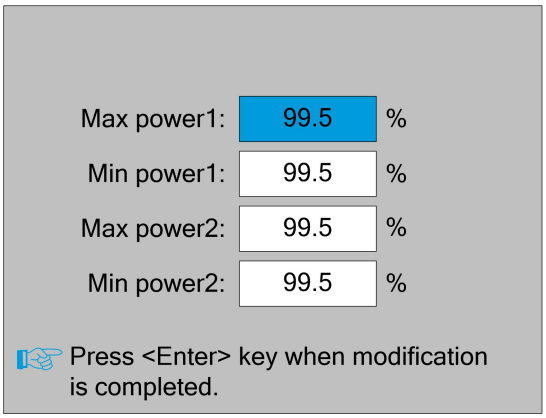

Figure

At this point, the "blue selection block" stays on the first parameter to indicate that the parameter is selected, press the number key and the backspace key to set and modify the parameter. Press the arrow button to move the "select block" to select other parameters for modification. When the parameters are modified, press the **<Enter>** key to save the parameters, press the **<Esc>** key to cancel the parameters, the interface disappears and returns to the main interface.

8.4 Set the layer parameters

After selecting a file to preview on the main interface, If there is layer information in the layer parameter area, show as below:

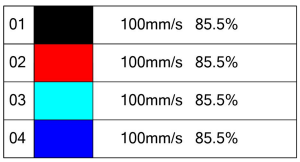

Figure

User can push **<Enter>** key to let the cursor move to the first layer show as below:

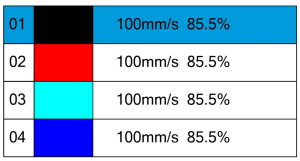

Figure

And then “Up and down” Keys can be pushed to select the intent layer, on that time, user can push **<Enter>** key to check the selected layer’s parameters, show as below:

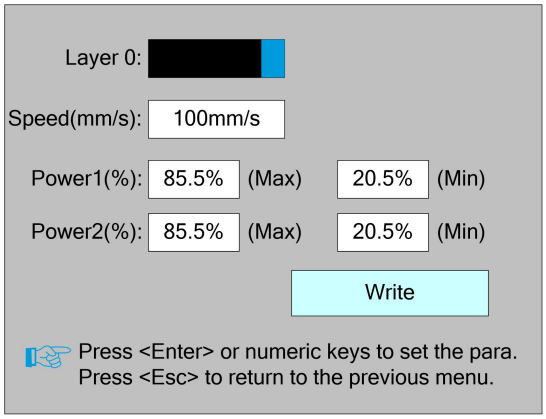

Figure

At this point, the "blue selection block" stays on the layer number entry, and then press the **<Enter>** key to enter the selection layer mode, while the "blue selection block" becomes , press the "up/down" key to select other layers, and then press the **<Enter>** key to exit the layer selection mode. Then press the "up/down" key to move the "selection block" to the layer parameter entry to be modified. Press the number key and the backspace key to set and modify the parameters. After setting the parameters, move the "selection block" to the "write parameters" entry. Press the **<Enter>** key to save the current layer parameters, otherwise the parameters will not be saved. Press the **<Esc>** key interface to disappear and return to the main interface.

8.5 Menu Function

Push the **< Menu>** key when the screen is on the main interface, it will show as below:

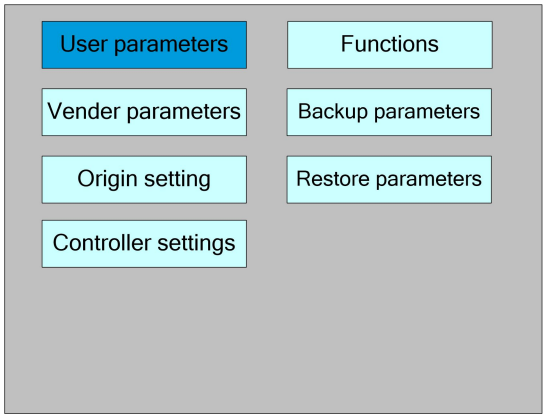

Figure

Press the **<Esc>** key to return to the previous menu.

8.5.1 User parameters

In the menu interface, select "User parameters" entry and press the **<Enter>** key ,it will show as below:

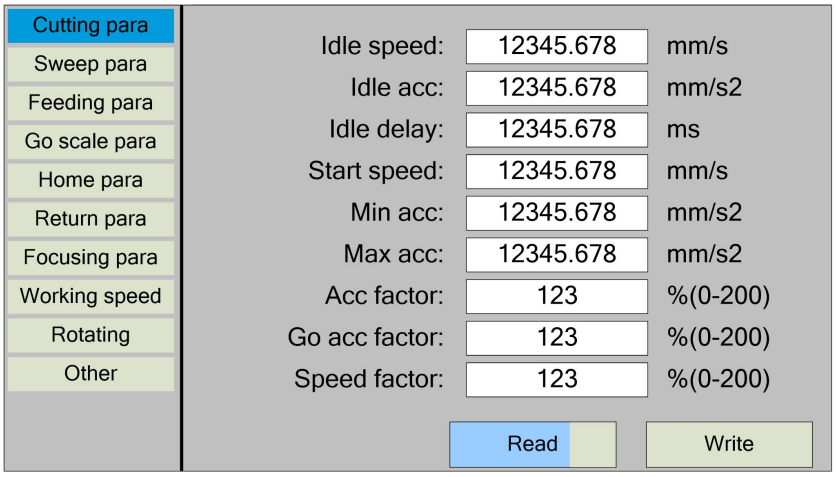

Figure

At this point, the panel automatically reads the motherboard parameters and displays them, while displaying the progress of the read parameters in the "Read Parameters" entry. When all the parameters are read out, the user can press the "up/down" key to move the "blue selection block" to select a parameter category such as "carving", "feeding" and so on. The right parameter area displays the corresponding parameters. If the user does not need to modify the parameters, press the **<Esc>** key to return to the menu interface.

If the user needs to modify the parameters, press the **<Enter>** button, and the "blue selection block" switches to the first parameter in the parameter area, as shown in the following interface:

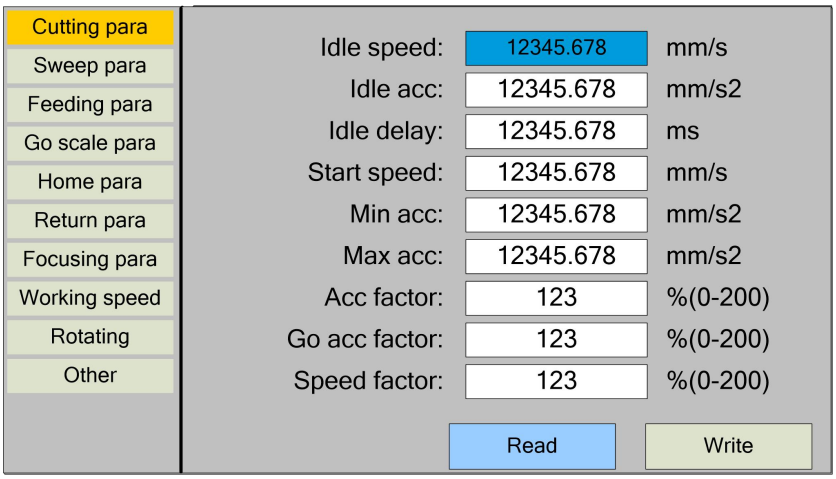

Figure

At this point, the user can press the "up/down" key to select a parameter, press the number key to modify the numerical parameters (such as "Idle speed"), for non-numerical parameters (such as "Scan mode"), when the "blue selection block" stops on the parameter, press the **<Enter>** key to enter the modification mode (the "blue selection block" right side becomes), press the "up/down" key. Modify the parameters. After the modification, press the **<Enter>** key to exit the modification mode. When the current page parameters have been modified, move the "blue selection block" to the "Write" entry and press the **<Enter>** key. The panel saves all the parameters on the motherboard and takes effect, and displays the save progress on the "Write" entry. If the user wants to verify that the parameters are saved successfully, he can move the "blue selection block" to the "Read" entry and press the **<Enter>** key, then the panel reads the motherboard parameters again and displays them. When pressing the "left/right" key, the Blue Select Block switches back to the parameter category, as shown in Figure 8.5.1-1, where the user can select another parameter category to modify or press **<Esc>** to return to the menu interface.

Other interface operations are similar, and the interface is displayed as follows:

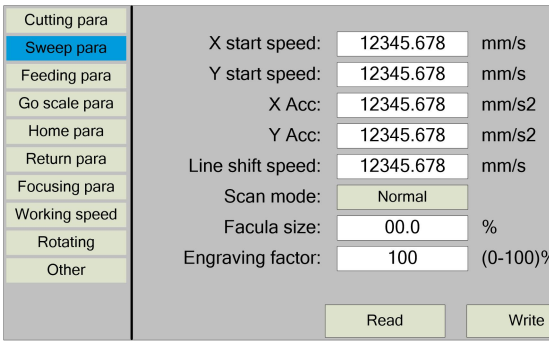

Figure

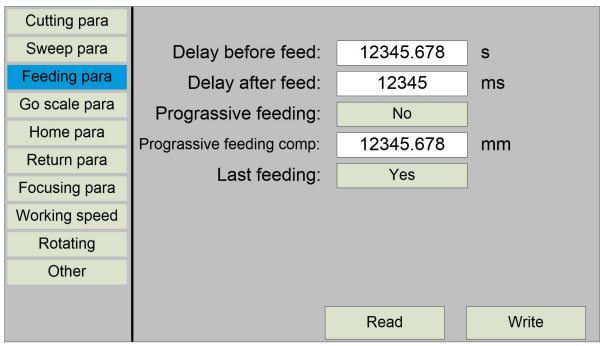

Figure

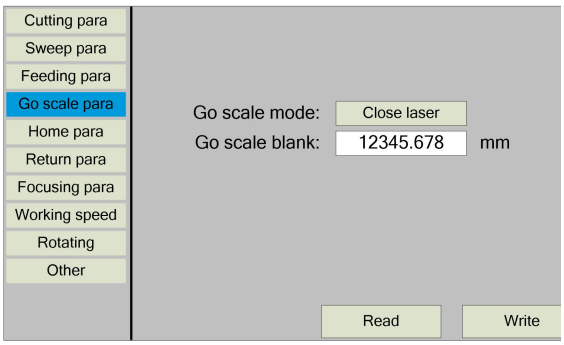

Figure

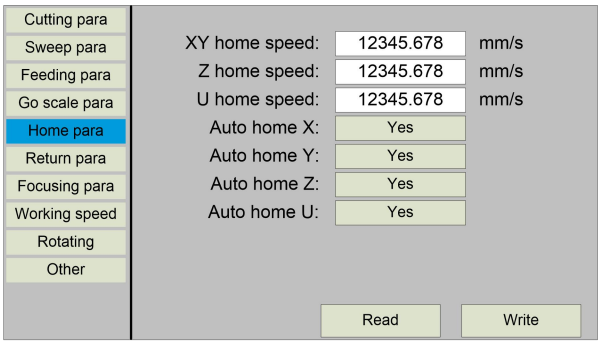

Figure

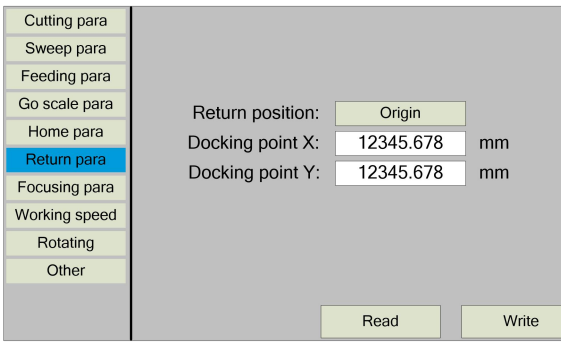

Figure

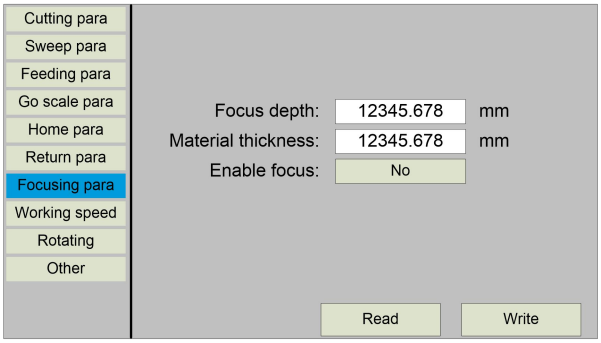

Figure

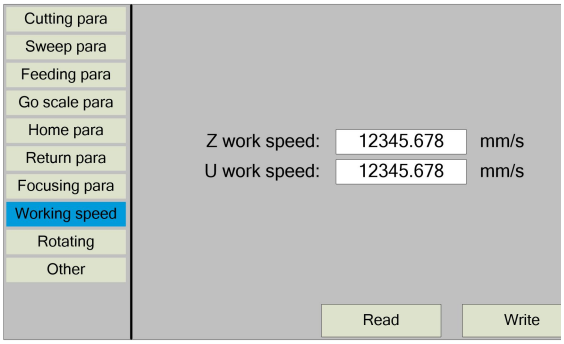

Figure

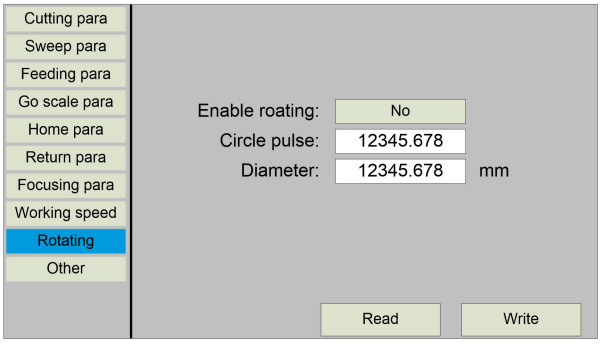

Figure

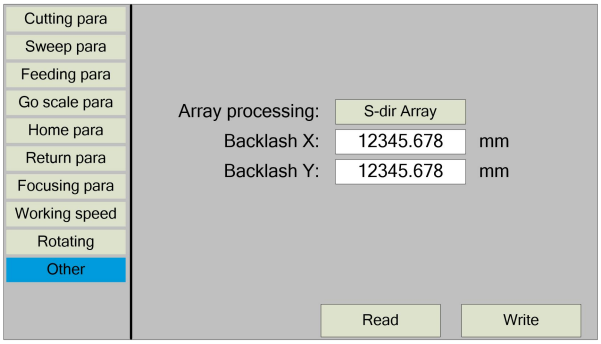

Figure

8.5.2 Vender parameters

In the menu interface, select "Vender parameters" entry and press the **<Enter>** key ,it will show as below:

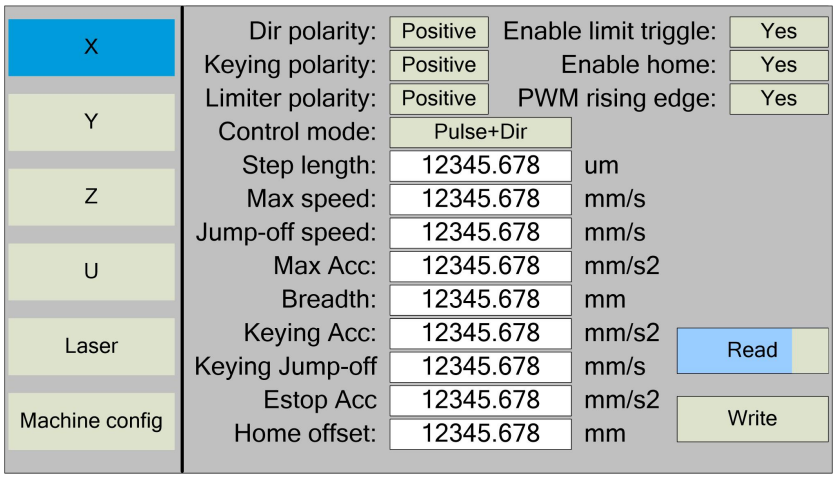

Figure 8.5.2-1

The interface parameters of Y, Z and U axes are the same as those of X axis parameters.

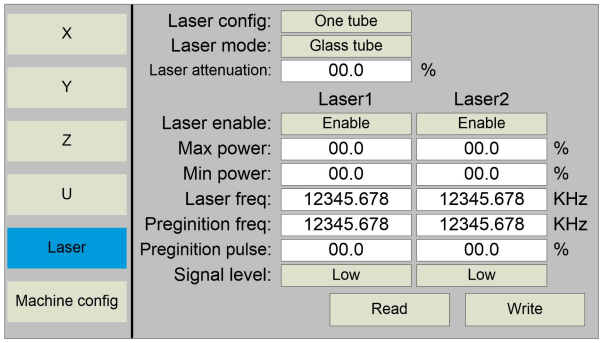

Figure

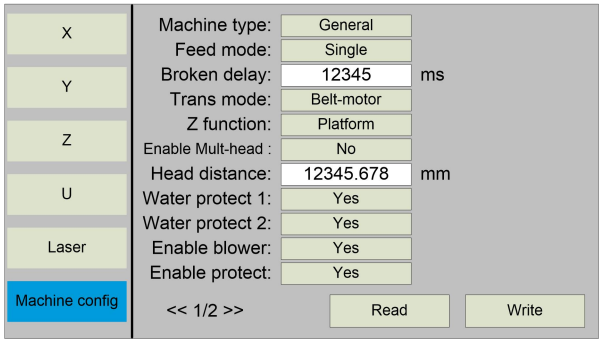

Figure

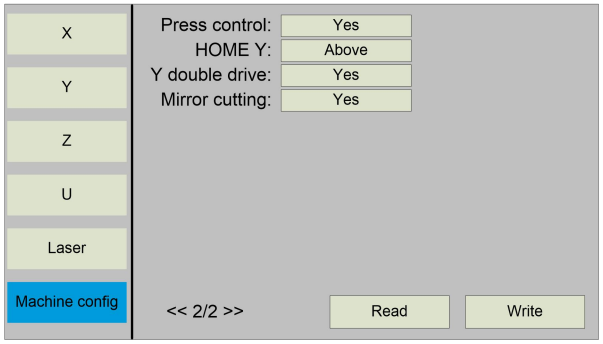

Figure

The operation and settings of the factory parameters are the same as the user parameters.

8.5.3 Origin Setting

In the menu interface, select "Origin setting" entry and press the **<Enter>** key ,it will show as below:

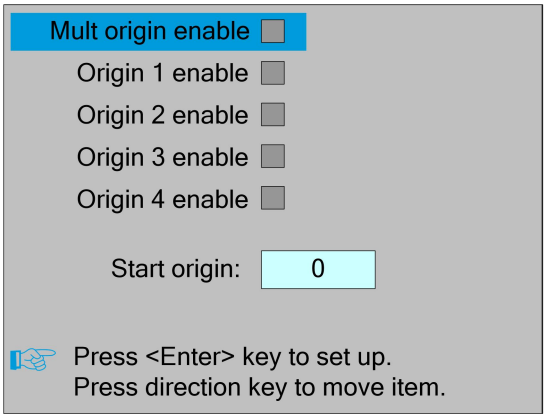

Figure

At this point, the "blue selection block" defaults to select the "Mult origin enable" entry, press the **<Enter>** key to enable or disable(the right small square shows red when enabled), when enabled, the little finger to "Origin 1 enable" entry means to start setting the origin point 1, first move the "blue selection block" to this entry and press the **<Enter>** key to enable the location point 1 entry, then press **<Shift>** key, then press the direction key to change the X/Y axis coordinate value, then press **<Origin>** key to set the current coordinate value to the location point 1, and finally press **<Shift>** key to return to the current interface operation. The operation process interface is as follows:

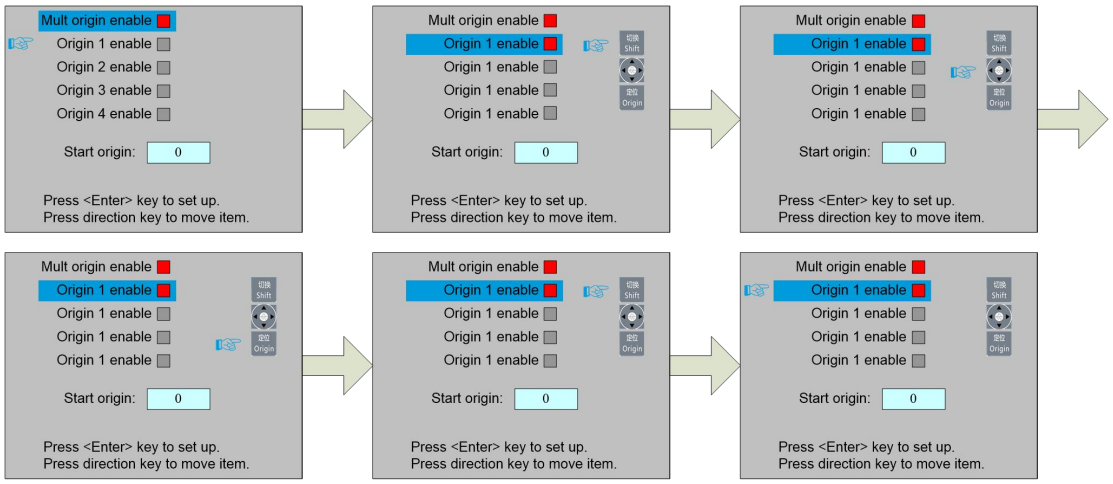

Figure

Other origins are set in the same way.

When the "Select Block" stops on the "Start origin" entry, press the **<Enter>** key to enter the modification, press the "Up/Down" key to modify, after the modification, press the **<Enter>** key, the parameters automatically take effect, and press the **<Esc>** key to return to the menu interface.

Each item introduced as below:

- **Multiple Origins Enable:** “Yes” or “No” can be selected. If you select “No”, the system will use the single-origin logic. You can press the **<Origin>** key and set the origin, and only this origin can become valid. If you select “Yes”, the system will use the multiple- origin logic and the **<Origin>** key on the keyboard become invalid. In such a case, the parameter of each origin must be set in the menu as follows.
- **Origin Enable1/2/3/4:** after the multiple-origin logic is enabled, the four origins can independently be prohibited and enabled.
- **Start Origin:** there are such five digits as 0~4 for option, which are the origins to be used for the next figure. Origin 0 means the origin set by the **<Origin>** key on the panel in the single- origin logic. 1~4 means the serial number of the origins in the multiple- origin logic. Start origin can be modified to any one of origin 1~4, so as to control the start location of next work (the premise is that the origin is enabled), but it can’t be modified to origin 0.

Prompt	Once the multiple- origin logic is selected and if the serial number of the next origin is 1 and four origins are enabled, when the memory file function is started or the processing file is uploaded into the PC and this file selects “Take the Original Origin as current Origin”, the work started for each time will use different origins. The rotation order of origin is 1->2->3->4->1->2…….

8.5.4 Backup parameters

In the menu interface, select the "Backup Factory Parameters" entry, press the **<Enter>** button and then pop up the password input interface. The password input operation refers to Section 8.9. If the password is input correctly, the system will backup all the current user parameters and factory parameters. Interface prompt "Backup parameter is successful".

Prompt	After the manufacturer regulates all parameters of the machine well (including all manufacturer parameters and user parameters), this function can be used to store the well-regulated parameters to help

	users to recover the original parameters (including all manufacturer parameters and user parameters) through selecting “Recover Para” when they regulate parameters improperly.

8.5.5 Restore parameters

In the menu interface, select the "Restore Factory Parameters" entry, press the **<Enter>** button and then pop up the password input interface. The password input operation refers to Section 8.9. If the password is input correctly, the system will restore all the current user parameters and factory parameters with the factory parameters set before. Interface prompt "recovery parameter is successful".

8.6 Controller setting

Select the "Controller Settings" entry under the menu interface, press the **<Enter>** button, and then pop up the controller settings interface as follows:

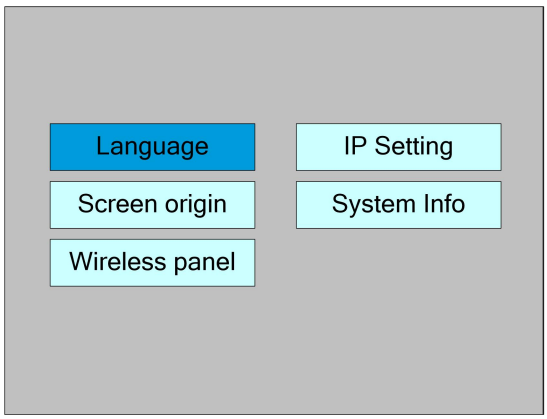

Figure

Press the **<Esc>** key to return to the previous menu.

8.6.1 Language

Select the "Language" entry under the controller setting interface, press the **<Enter>** button, and then pop up the language settings interface as follows:

Figure

Press the direction key to select a language and press the **<Enter>** key to set up the function and automatically return to the menu interface.

8.6.2 Screen origin

Select the "Screen origin" entry under the controller setting interface, press the **<Enter>** button, and then pop up the interface as follows:

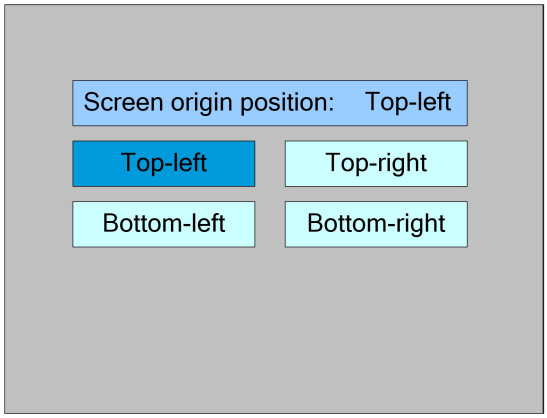

Figure

The display screen's origin position is set here, and different screen origin positions are selected to adjust the display graphics position in different X or Y directions.

Press the direction key to select a item and press the **<Enter>** key to set up the position and press the **<Esc>** key return to the main interface.

Caution	This item is only used to preview the file on the screen, and it is no meaning to the machine's movement.

8.6.3 Wireless panel

Select the "Wireless panel" entry under the controller setting interface, press the **<Enter>** button, and then pop up the interface as follows:

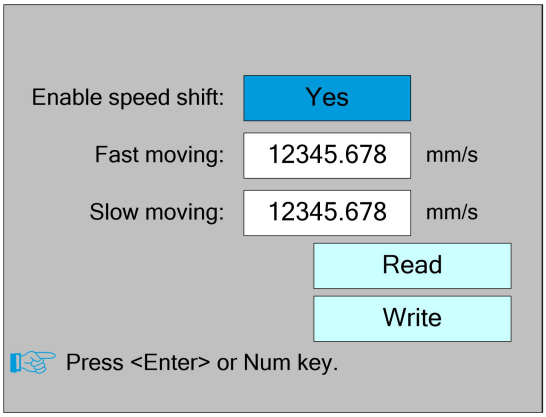

Figure

When modifying the first parameter, press the <Enter> key to enter the modification mode ("blue selection block" right side becomes), press the "Up/Down" key to modify, and then press the <Enter> key to exit the modification mode. Press the direction key to select other parameters and press the number key to modify the parameters. After the modification, move the "selection block" to the "Write " entry and press the <Enter> key. The parameter setting takes effect. Press the <Esc> key to return to the previous menu.

8.6.4 IP Setting

Select the "IP setting" entry under the controller setting interface, press the **<Enter>** button, and then pop up the interface as follows:

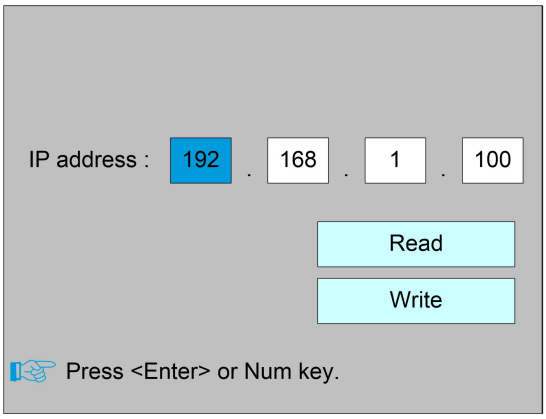

Figure

Press the direction key to select a parameter, then press the number key to modify the parameter. After the modification, move the "selection block" to the "Write" entry and press the <Enter> key. The parameter setting takes effect. Press the <Esc> key to return to the menu at the previous menu.

8.6.5 System Info

Select the "System Info" entry under the controller setting interface, press the **<Enter>** button, and then pop up the interface as follows:

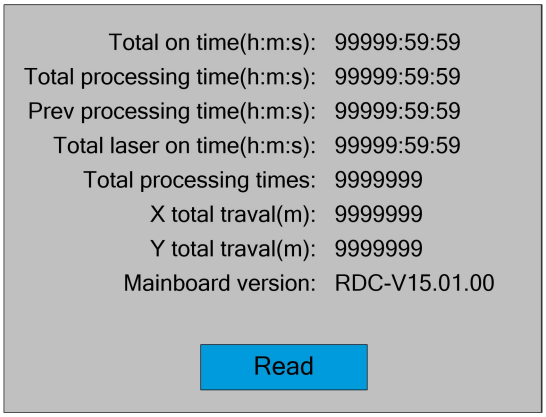

Figure

Press the **<Enter>** key to read motherboard information.Press the **<Esc>** key to return to the previous menu.

8.7 Funtions

In the menu interface, select "Function" entry and press the **<Enter>** key ,it will show as below:

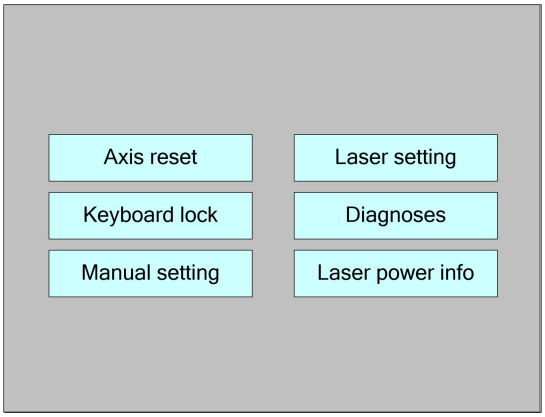

Figure

Press the **<Esc>** key to return to the previous menu.

8.7.1 Axis reset

Select the "Axis reset" entry under the controller setting interface, press the **<Enter>** button, and then pop up the interface as follows:

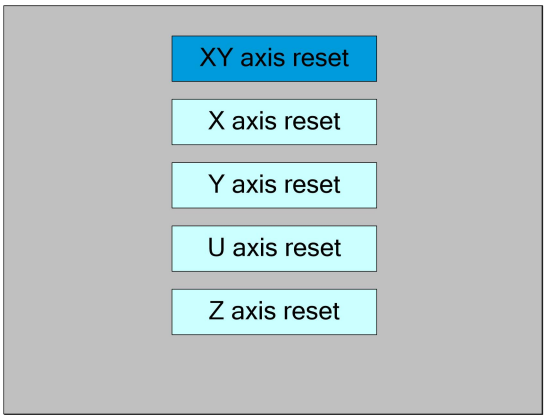

Figure

Press the direction key to select an entry and press the <Enter> key, the system performs the axis reset, and prompts "Resetting...".

Press the **<Esc>** key to return to the previous menu.

8.7.2 Keyboard lock

Select the "Keyboard lock" entry under the controller setting interface, press the **<Enter>** button, and then pop up the interface as follows:

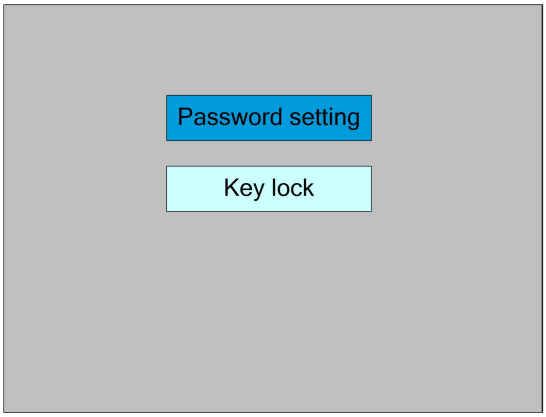

Figure

- Password setting

This entry allows you to set the default password for keyboard locking and use the new password for keyboard locking after setting up successfully.

- Key lock

This item can lock the keys. After entering the correct password, the keys automatically lock and return to the main interface. When any key is pressed, the interface prompts the input password to unlock the keys.

Please refer to section 8.9 for password input and password settings.Press the **<Esc>** key to return to the previous menu.

8.7.3 Manual setting

Select the "Manual setting" entry under the funtions interface, press the **<Enter>** button, and then pop up the interface as follows:

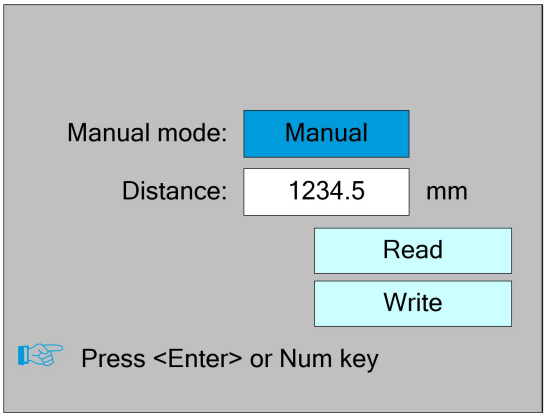

Figure

Manual mode has “Continue” and “Manual”, press the <Enter> key to enter the modification mode ("blue selection block" right side becomes), press the "up/down" key to modify, after the modification, press the **<Enter>** key to exit the modification mode. After all modifications, move the “Select block” to the Write Parameters entry and press the <Enter> key. The parameter settings take effect. Press <Esc> key to return to the previous menu.

When “Continue” item is selected, then the “Manual” item is not valid, on that time, push the direction keys to move the corresponding axes, and when the pushed key is loosed, then the corresponding axes will finish moving. When the Mode item is “manual”, then pushing the direction key one time, the corresponding axes will move a fixed length, unless the scope is overstepped.

8.7.4 Laser Setting

Select the "Laser setting" entry under the funtions interface, press the **<Enter>** button, and then pop up the interface as follows:

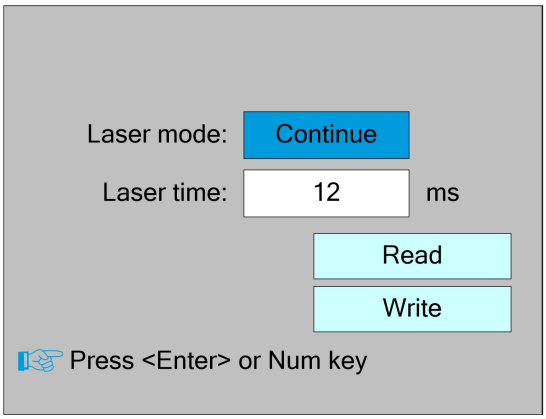

Figure

The operation method is the same as manual setting.

When “Continue” item is selected, then the “Laser time” item is not valid, on that time, push the Laser key to splash the enabled lasers, and when Laser key is loosed, then the lasers will finish splashing. When the Laser mode item is “Manual”, then pushing the Laser key one time, the enabled lasers will splash a fixed time.

8.7.5 Diagnose

Select the "Diagnose" entry under the funtions interface, press the **<Enter>** button, and then pop up the interface as follows:

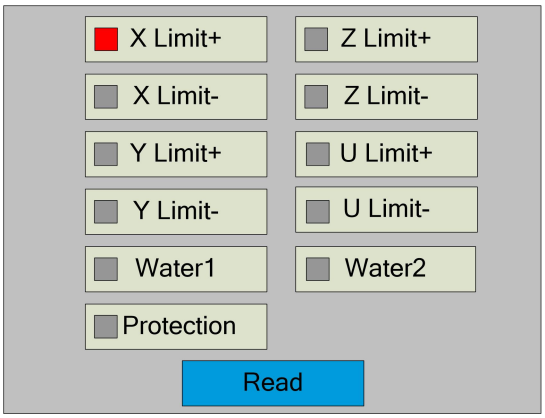

Figure

The interface displays the hardware IO information of the system, and reads the hardware information of the system by pressing the <Enter> key. When the hardware signal is triggered, the small box on the left side of the corresponding entry will show red. Otherwise, it will show gray. Press the <Esc> key to return to the previous menu.

8.7.6 Laser power infomation

Note: laser power information function is effectively configured on PC software.

Select the "Laser power info" entry under the funtions interface, press the **<Enter>** button, and then pop up the interface as follows:

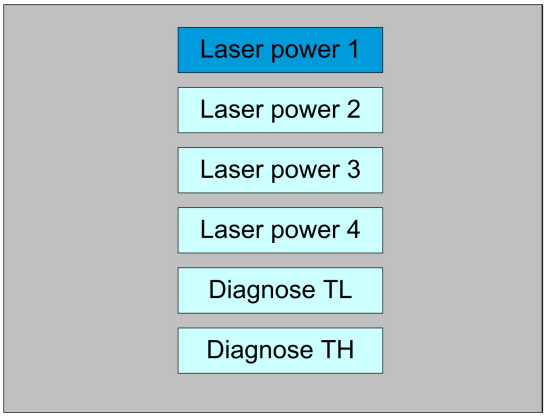

Figure

When the "blue selection block" stops at the items 1, 2, 3 and 4 of the laser power supply, press the <Enter> key to view the information of each power supply. The interface is as follows:

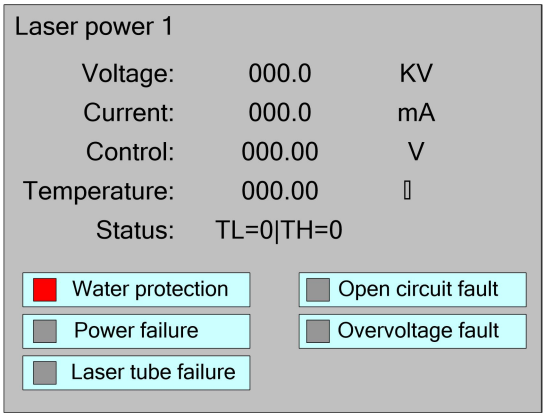

Figure

When the "blue selection block" stops at the "diagnostic TL" and "diagnostic TH" entries, press the <Enter> key to check whether the IO of the laser power supply is abnormal, and if so, an alarm will be generated.

Press the <Esc> key to return to the previous menu.

8.8 File Management

8.8.1 Memory File

Push the **<Menu>** key when the screen is on the main interface, it will show as below:

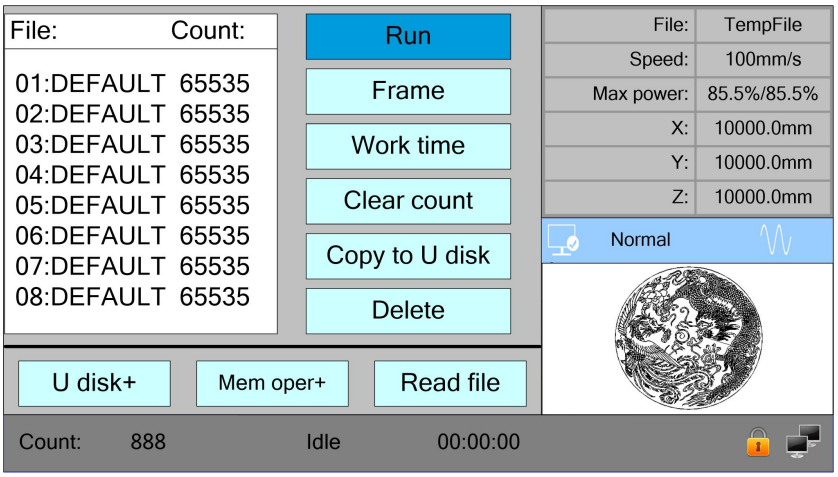

Figure

When showing this menu, the system would read the memory file firstly, the file name and the work times would be listed in the area, and the selected file is previewed in the bottom right area. **<Up >/<Down>** keys could be used to move the cursor on the file name list. When the cursor is on a target file name, presses the **<Enter>** key, the selected file will be previewed on the main interface, and then if **<Esc>** key is pushed, the preview will disappear.

<Left>/<Right> keys could be used to move the cursor left and right.

Press the **<Esc>** key to return to the previous menu.

The items on the right and bottom are as follows:

- **Run**: To run the selected file;
- **Track**: To track the selected file, and the track mode is optional;
- **Work time**: To forecast the running time of the selected file, and the time is accurate to 1ms;
- **Clear count**: To clear the running times of the selected file;
- **Copy to U disk**: To copy the selected file to U disk;
- **Delete**: To delete the selected file in the memory;
- **U disk**: read the U disk file list;
- **Memery operation**: the other operation of the memory files;
- **Read mem file**: read the memory file list;

8.8.2 Memory operation

Select the "Memory Operation" entry in the above interface and press the **<Enter>** button, then the pop-up menu appears as follows:

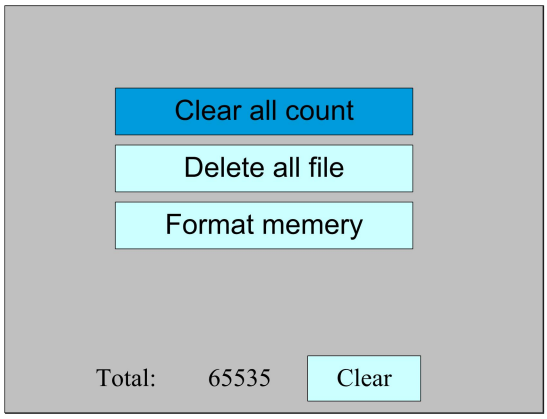

Figure

- **Clear all count**: To clear the running times of every file in the memory
- **Delete all file**: To delete all memory files
- **Format memery**: To format memory speedily, and then all the files in memory will be deleted.
- **Total**: the total running times of all the files.

Methods of operation are the same as above.Press the **<Esc>** key to return to the previous menu.

8.8.3 Format memery

Select the "Format Memory" entry in the above interface and press the **<Enter>** button, then the pop-up menu appears as follows:

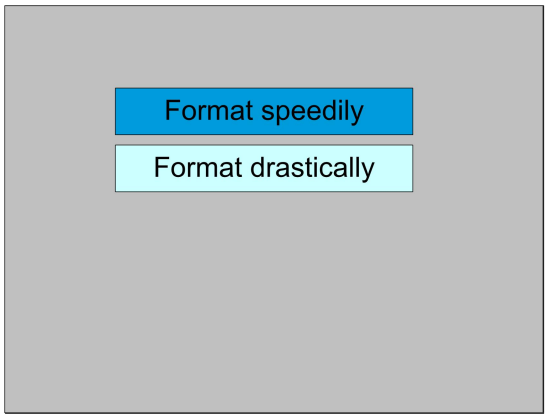

Figure

- **Format speedily**: To format memory speedily, and then all the files in memory will be deleted.

- **Format drastically**: To format memory drastically, and then all the files in memory will be deleted.

Methods of operation are the same as above.Press the **<Esc>** key to return to the previous menu.

8.8.4 U disk file

If the "U disk" entry in figure 8.8-1 is pressed, the system will show as figure 8.8-4, and the operation method is all the same as figure 8.8-1.

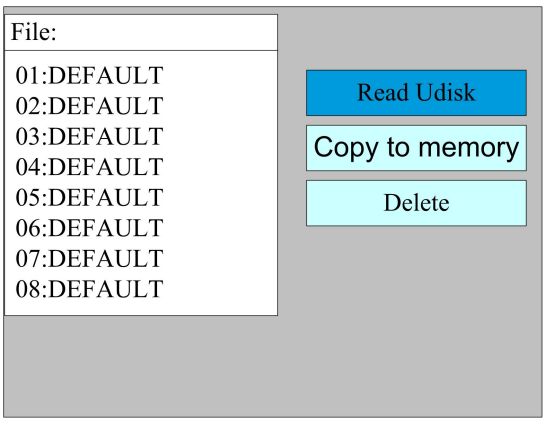

Figure

- **Read Udisk**: read the file list in the Udisk;
- **Copy to memory**: copy the target Udisk file to the memory;
- **Delete**: delete the selected Udisk file;

Prompt	This system supports such file formats of Udisk as FAT32 and FAT16, but it can identify them when the files are put under the root directory of Udisk. The file name of more than 8 characters will automatically be cut out by the system. The file name that has only English letters and digits will not show when they are copied to the mainboard. The files copied from the mainboard to Udisk will be placed under the root directory of Udisk.

8.9 Password input and settings

8.9.1 Password Input

When you enter certain interfaces or perform certain operations, you need to enter the password. The interface is as follows:

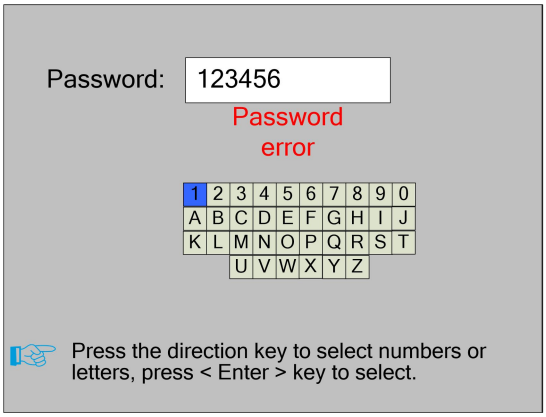

Figure

You can enter the password directly by pressing the number key, or you can select a number or letter by pressing the direction key, select by pressing the **<Enter>** key, and press the **<Enter>** key when you enter six passwords. If the password is correct, you can go to the next interface or perform the operation, otherwise you can display a "password error" and re-enter.

Press the **<Esc>** key to return to the previous menu.

8.9.2 Password Setting

The password settings interface is shown in the following figure:

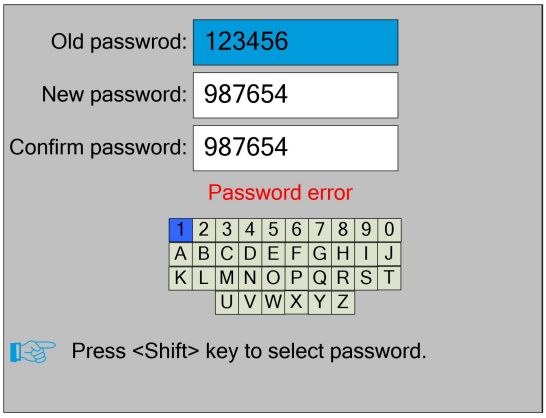

Figure

At this point, you can enter the password directly by pressing the number key, or you can press the **<Shift>** key to use the keypad, press the direction key to select a number or letter, press the **<Enter>** key to select, and then press the **<Shift>** key to return to the password selection. If the password is entered correctly, the new password will become effective, otherwise the "password error" will be displayed.

Press the **<Esc>** key to return to the previous menu.

8.10 Prompt and alarm information

In the process of user operation or system operation will pop up some hints and alarm information, such as reset, water protection failure, hard limit protection, border crossing and so on.

- Prompt

The system pop-up “The system is resetting.”. show as below:

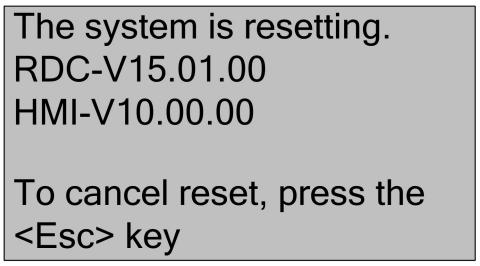

Figure

The user operates according to the interface prompts.

- Alarm Information

The system generates “water protection fault”, show as below:

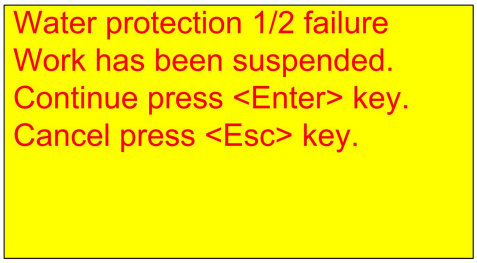

Figure

At this point, the system performs related operations according to the **<Enter>** or **<Esc>** keys.

8.11 Auto Focus

Push the **<Focus>** key when the screen is on the main interface,

Section 9 Manufacturer/User Parameters Explanation

CONTENTS:

- Manufacturer parameters
- User parameters

9.1 Manufacturer parameters

（1）Motor parameters

X/Y/Z/U axle parameters

- **Direction Polarity**: Modification of direction polarity can move the motor to the opposite direction. The modification purpose can move this axle to the origin on resetting. If this axle moves far from the origin on resetting, it means the direction polarity of this axle is wrong in setting and should be modified.
- **Spacing Polarity**: it is used to set the high and low level mode of spacing signal. When the motion axle arrives at the spacing position and input a low-level signal to the mainboard, the spacing polarity at this time should be set to be minus.
- **scope**: it means the farthest distance that the motion axle can move, which is determined in accordance with the actual condition of the machine.
- **Distance from Origin to Hard Spacing**: if this axle enables hard-spacing protection, generally this value should be set to be 2~5mm; if it is set to be 0, when this motion axle moves to the smallest coordinate, i.e. 0, this spacing may be validate, which may wrongly triggers the hard-spacing protection and scram the machine. If the hard-spacing protection is not enabled, this value can be set to be 0~5mm.
- **Control Mode**: Double pulse or direction+single pulse are optional, in general, direction+single pulse is selected.
- **Motor Stepping**: it means the impulse equivalent, the absolute distance gone by the corresponding motion axle when a pulse is delivered to the motor. Prior to the correct setting of this value, a large rectangle can be cut with the machine (the larger the figure is, the smaller the difference is). The motor stepping can automatically be calculated according to the figure length and measuring length.
- **Hard-spacing Protection**: it is used for whether the hard-spacing protection of this axle is enabled.
- **PWM Rising edge valid：** To set the motor driver's pulse signal rising edge valid or falling edge valid. If this item is disabled, the pulse is falling edge valid, or, it's rising edge valid.
- **Reset Enable**: if the machine is provided with this axle, its "Reset Enable" should be opened; if no, its "Reset Enable" should be prohibited.
- **Takeoff Speed**: it means the speed of the motion axle in direct start from the idle condition. If this value is excessively large, it will make the motor lose steps, jar and even

squeak; if small, it will reduce the running speed of the whole figure. If the inertia of the motion axle is larger (the axle is heavier), you can set a smaller takeoff speed; if smaller (the axle is lighter), you can increase the takeoff speed. For example, the typical value is 5~30mm/s.

- **Maximum Speed**: it means the maximum limit of motion speed that this axle can bear. This parameter has something to do with the driving force of motor, the inertia of motion axle and its drive ratio. For example, the typical value is 200~500mm/s.
- **Maximum Acceleration**: it means the maximum acceleration of the motion axle in accelerated or decelerated motion. If the acceleration is set too large, it will make the motor lose steps, jar and even squeak; if too small, it will cause the reduction of acceleration so as to reduce the running speed of the whole figure. For the axles with larger inertia, such as Y axle corresponding to the beam, its typical setting range is 800~3000mm/s2; for the axles with smaller inertia, such as X axle corresponding to the car, its typical setting range is 8000~20000mm/s2.
- **Scram Acceleration**: if this axle enables the hard-spacing protection, when this axle moves to the spacing position, it will scram operation at the scram acceleration. This value can be 2~3 times of the maximum acceleration for this axle.

Key parameters

- **Key Move Takeoff Speed**: it means the starting speed to move this axle by way of the keys on the keyboard, which can't be higher than the takeoff speed.
- **Key Move Acceleration**: it means the acceleration to move this axle by way of the keys on the keyboard, which can't be higher than the maximum acceleration of this axle.
- **Key Polarity**: it is used to control the movement direction of the axle that is moved through manual operation of the keys. After the direction polarity is correctly set, if you press the directional keys on the operating panel, this axle will move to the opposite direction. In such a case the polarity of keys should be modified.

（2）Laser parameters

- **Laser Configuration**: single laser and double lasers are available for option and set in accordance with the laser-tube quantity provided by the manufacturer.
- **Laser Type**: glass tube, RF laser (not need pre-ignition pulse) and RF laser (needing pre-ignition pulse) available for option.
- **Laser Attenuation Quotiety**

- **Laser Enable**: When double lasers are used, then each laser can be respectively enabled or disabled.
- **Minimum Power**
- **Maximum Power**
- **Laser PWM Frequency**
- **Pre-generation Frequency**
- **Pre-generation pulse scale**: When the laser is RF-laser and it's need to pre-generate PWM, then set the Pre-generation Frequency and the Pre-generation pulse scale.
- **Water Protector Enabled**: When the water protector is enabled, the mainboard will detect the input port of water protector. If this port is of low level, it will be deemed normal; if this port is of high level, the mainboard will forcibly close the laser to suspend the work in progress and the system will warn. If the water protector is not enabled, the mainboard will not detect the input port of water protector and so the water protector can be unconnected.

Laser PWM Frequency is used to set the pulse frequency of control signal used by this laser, in general, glass tube is about 20KHZ, RF laser is about 5KHZ; the maximum/minimum power (%) is used to set the limit power of this laser, that is to say, during the operation, the maximum power set by the user can't be higher than that set here and the minimum power set by the user can't be less than that set here, either. When a laser's power is attenuated, then the laser attenuation quotiety may be set

Prompt	If it is only provided with the single laser, it can show the one-path parameter.

（3）Other manufacturer parameters

Machine configuration

- **Machine Type**: In most cases, the general engraving machine should be selected and other types used for specific purposes.
- **Transmission Mode**: generally the "Belt Stepping Type" should be made choice of. The control algorithm will be changed a little when other types are selected.
- **Feeding Mode**: it has single-way mode and two-way mode for option. If it is of single-way feeding, it is unnecessary to check the coordinates. Feeding can be conducted in the single-way mode; if it is of two-way feeding, the system will check the maximum and minimum

coordinates. The odd sequence means feeding should be done to one direction and the even sequence means feeding done to the other direction. The initial direction for the first time can be changed through setting the directional polarity or modifying the plus and minus values of the feeding length.

- **Power-Off-Restart Delay**: it can be set to be 0~3000ms. After the power-off of the electricity grid, the power supply of the system will not drop to 0 at once. There is a delay during this time. The delay value set here should basically consistent with the actual off-delay value. If the deviation of set value is larger, on the de-energizing for continuous engraving, either the figure processed for the second time is not closed with that before the cutoff, or it is coincided with that too much.

Prompt	After the configuration parameters in the manufacturer parameters, such as directional polarity, control mode, laser type and laser PWM frequency, are modified, the system should be reset. Such a modification can function upon the resetting of the system.

Enable parameters

- **Door Opening Protection**: If this item is enabled, then the door opening protection must be connected to the controller, or, the machine will not run.
- **Whether to enable the blower**: If using wind out port to control the blower by the graph layer parameter, this item must be enabled, or, the wind output is a signal for other using.

9.2 User parameters

（1）Cutting parameters(Only affect cutting arts)

- **Idle Move Speed**: this parameter decides the highest speed of all non-lighting lines for the machine in the movement process.
- **Idle Move Acceleration**: it means the highest acceleration of all non-lighting lines. Idle stroke speed and idle stroke acceleration can be set higher to reduce the working time of the whole figure, but if they are set too high, it may cause the jarring of track, so comprehensive consideration should be given to the setting.
- **Idle Move Delay**: If this parameter is zero, then after idle moving there is no delay, or, there is delay and the speed will decrease to turn off speed.
- **Turning Speed**: it means the speed of turning at the acute-angle corner, which is also the highest speed in the whole cutting process.

- **Turning Acceleration**: it means the acceleration of turning at the acute-angle corner when cutting. If the two speeds are set too high, jarring will happen to the turning; if set too low, it will influence the cutting speed. This acceleration is the least value of the whole graph.
- **Cutting Acceleration**: it means the highest acceleration value in the whole cutting process.
- **Acc Factor**: This parameter indicates how speedy the cutting acceleration is changing.
- **G0 Acc Factor**: This parameter indicates how speedy the idle move acceleration is changing.
- **Speed Factor**: This parameter indicates the cutting speed of the arc of various curvatures.

● **Key Setting**: This is a button but not a parameter, this button is used to recommend some experiential cutting parameters.

（2）Scanning parameters(Only affect scanning arts)

- **X-axle Starting Speed**
- **Y-axle Starting Speed**
- **X-axle Acceleration**
- **Y-axle Acceleration**

The above four parameters are used to set the starting speed and acceleration of two axles on the scanning. The higher the two speeds are, the quicker the scanning is.

- **Scanning Line-feed Speed**: this parameter is specially used to control the highest speed at which that the previous line vertically moves to the next line in the scanning mode. If the space between lines is larger during the scanning or if the distance of each block is larger during the scanning and deblocking of figure, it is necessary to position each line or block accurately. In such a case the speed of scanning line-feed can be set as a lower value.
- **Scanning Mode**: it is divided into general mode and special mode for option. If special mode is used, the laser power should be increased. The smaller the speckle percentage is, the more the laser pov uces. The laser power to set should be larger in order to reach the same scanning depth. The purpose to select the special mode is to make the laser light at high power and short time. On the depth scanning the effect that the bottom is flatter is obtained, but it should be noticeable that if the speckle adjustment is not appropriate, it can achieve this goal. If the high power remains short, the lighting mode will influence the life of the laser. The system will default the selection of general mode.

- **Speckle Size**: When the general mode is selected as the scanning mode, this parameter will become ineffective; when the special mode is selected, this parameter will become effective. The controller will control this parameter among 50%~99%.

Prompt	The cutting and scanning parameters can't exceed the limited ones in the axle parameters. If so, the setting will become ineffective and the system will automatically cover the parameters with the axle parameters.

（3）Feeding parameters

- **Before-feeding Time Lag**: settable at 0~300s. The lagged time can facilitate user's feeding and picking on the feeding device.
- **After-feeding Time Lag**: settable at 0~9.9s. It can facilitate the feeding device's delaying in jarring after moving to the correct position and waiting for the 2nd work after the feeding axle stands still completely.
- **Progressive feeding**: If this item is enabled, then the dummy array graph on Y direction will run in the same position, running one line graph, the U axes moving one time to feed, the moving length of U axes is the interval of the two lines graph on Y direction.
- **Progressive feeding repay**: Because of the imprecision of U axes' moving, there can set a value to repay the interval of the two lines graph on Y direction.

（4）Reset parameters

- **Reset Speed**: it means the speed of X/Y-axle linkage reset to the origin.
- **X axle start-up reset(Auto home)**
- **Y axle start-up reset(Auto home)**
- **Z axle start-up reset(Auto home)**
- **U axle start-up reset(Auto home)**

You can select "Yes" or "No" in the field of the above four parameters, which is used to confirm whether each axle can be reset on the startup.

（4）Go scale parameters

- **Go scale Mode**: "Blanked Bordering" means idling to start border preview; "Outputted Border Cutting" can manually cut off the well-processed figure; "4-corner Dotting" means to emit the light at four corner points of the frame to make a point and turn off light. The size and position of this figure can be checked intuitively through the four points. The bordering speed is the speed value set on the keyboard when the system is idle. For light output, its minimum/maximum power is the corresponding value set on the keyboard when the system is

idle (The lasering power on the 4-corner dotting means the well-set maximum power).

- **Go scale Blank**: It means whether to extend a certain length outside the actual frame of the figure on the preview/cutting of frame.

Prompt	If the frame crosses the border, the interface will prompt it. If the Enter key is pressed at this time, the system will cut the border at the maximum/minimum coordinates first, and then border the figure. This bordering can be given up.

（5）Other user parameters

- **Array Mode**: Two-way array or one-way array can be selected. Two-way array means the to-and-fro cutting of array in sequence; one-way array means the cutting of array from one direction to another. On selecting one-way array, the elements of each array are the same in action mode and completely uniform in action fluency, which takes a little more time than two-way array. Two-way array is the default option.
- **Back Position**: The origin (the relative origin) and the machine's absolute origin can be selected. This parameter decides the parking position of laser head after each work.
- **Focus Setting**: it means the distance from the focal point of laser head lens to Z-axle origin. When there is no automatic focusing function, this parameter becomes invalid.
- **Material thickness**: Thickness of the object to be processed.
- **Non-contact focusing**: When YES is selected, the focus mode is non-contact focus, otherwise it is contact focus mode. This parameter defaults to contact focus mode.

The above three parameters are used to set the auto focus function. The auto focus mode can be divided into two modes: contact focus and non-contact focus. Each mode is divided into two modes. The autofocus function is done by the Z axis.

Contact focus:

Mode 1: The Z-axis directly drives the laser head to move downward until the laser head touches the surface of the material. At this time, the controller considers the position to be the origin position of the Z-axis, and then the Z-axis moves to the opposite direction by a certain distance. The distance is the focal length value in the parameter settings. In this mode, the material thickness parameter is invalid.

Mode 2: The Z-axis drive platform moves upward until the material touches the laser head. At this time, the controller considers the position to be the origin position of the Z-axis, and then the Z-axis moves to the opposite direction by a certain distance, which is the parameter. The focus value in the settings. In this mode, the material thickness parameter is invalid.

Non-contact focus:

Mode 1: The Z-axis directly drives the laser head to move upward until the laser head touches the limit switch placed at the top. At this time, the controller considers the position to be the origin position of the Z-axis, and then the Z-axis moves in the opposite direction. A certain distance, which is the maximum stroke of the Z axis (the distance from the origin of the Z axis to the plane of the machine plane) minus the sum of the focal length value and the material thickness value in the parameter setting.

Mode 2: The Z-axis drive platform moves downward until the platform touches the limit switch placed at the bottom end. At this time, the controller considers the position to be the origin position of the Z-axis, and then the Z-axis moves to the opposite direction by a certain distance, the distance is The maximum stroke of the Z axis (the distance from the origin of the Z axis to the plane of the machine that touches the laser head) is the sum of the focal length value and the material thickness value in the parameter settings.

- **Backlash X**: The X axes' backlash, accurate to 1um.
- **Backlash Y**: The Y axes' backlash, accurate to 1um.

Thank you for your selection of our production!

All the copyright of this manual is owned by Ruida technology. Any person or company can not copy upload and send the manual without Ruida's permission.

Content will be revised or modified. We will not send message to every users.

If there are any question or suggestion about our products and manuals, please tells us.

Tel：(086)0755-26066687

Fax：(086)0755-26982287

Adress： 1B-1 buiding 5, Tian'an Nanyou industrial area,Dengliang road,Nanshan district, Shenzhen, Guangdong , China.

Website：www.rd-acs.com